MULTI SPLIT TYPE, HEAT PUMP AIR CONDITIONERS

Technical service manual

R410A Alfa Inverter multi Series

Indoor Models

SMF-H07AI

SMF-H09AI

SMF-H12AI

Outdoor Models

SMF-2E18AI

SMF-3E27AI

1. Product features
2. Specification
3. Dimensions
4. Refrigeration cycle diagram
5. Operation limits
6. Mode conflict
7. Pressure table
8. Wiring diagram
9. Electric control functions
10. Troubleshooting table for outdoor LED
11. Troubleshooting for outdoor unit
12. Exploded view

Annex 1 Characteristic of temp. sensor

Annex 2 Reference data

1. Product Features

1.1 Powerful at cooling/heating.

1.2 Low voltage start-up function.

1.3 Anti-icing function at cooling mode.

1.4 Anti-cold air function at heating mode.

1.5 Auto-defrosting.

1.6 Outdoor electric current protection

1.7 Temperature protection of the outdoor compressor top.

1.8 Error self diagnosis function.

1.9 Free connection between indoor and outdoor unit

2 Specification

2.1 Alfa series

Model			SMF-H07AI	SMF-H09AI	SMF-H12AI
Power supply		Ph-V-Hz	1Ph,220-240V~,50Hz	1Ph,220-240V~,50Hz	1Ph,220-240V~,50Hz
Capacity	Cooling Capacity	BTU/h	7000	9000	12000
	Heating Capacity	BTU/h	8500	11000	15000
	Running Current	A	0.17	0.17	0.14
	Design Pressure (Hi/Lo)	Mpa	4.2/2.5	4.2/2.5	4.2/2.5
	Max. Operating Pressure (Hi/Lo)	Mpa	3.5/3.5	3.5/3.5	3.5/3.5
Indoor fan motor	Model		RPG13H	RPG13H	RPG20D
	Brand		WEILING	WEILING	WEILING
	Input	W	36.5	36.5	51.5
	Capacitor	uF	1.2	1.2	1.5
	Speed(hi/mi/lo)	r/min	1050/920/820	1200/950/850	1250/1000/800
Indoor coil	a.Number of rows		2	2	2
	b.Tube pitch(a)x row pitch(b)	mm	21×13.37	21×13.37	21×13.37
	c.Fin spacing	mm	1.5	1.3	1.3
	d.Fin type (code)		Hydrophilic aluminium	Hydrophilic aluminium	Hydrophilic aluminium
	e.Tube outside dia.and type	mm	φ7, innergroove tube	φ7, innergroove tube	φ7, innergroove tube
	f.Coil length x height x width	mm	578X252X26.74	578X252X26.74	635×315×27.34
	g.Number of circuits		2	2	2
Indoor air flow (Hi/Mi/Lo)		m3/h	450/400/350	500/460/410	680/520/420
Indoor noise level (Hi/Mi/Lo)		dB(A)	34/32/30	36/34/32	39/33/28
Liquid side/ Gas side		mm(inch)	Φ6.35/Φ9.53	Φ6.35/Φ9.53	Φ6.35/Φ12.7
Indoor unit	Dimension (W*H*D)	mm	750*250*205	750*250*205	815*280*215
	Packing (W*H*D)	mm	830*285*336	830*285*336	915*290*360
	Net/Gross weight	kg			

2.2 Outdoor unit

Outdoor Model			SMF-2E18AI		SMF-3E27AI		
Indoor Units Combination			Single	Double	Single	Double	Treble
Power supply		Ph-V-Hz	1Ph,220-240V~,50Hz		1Ph,220-240V~,50Hz		
Cooling	Capacity	Btu/h	7000～12000	18000	7000～12000	16000～24000	27000
	Capacity	W	2000～3500	5275	2000～3500	4690～7000	8000
	Input	W	750～1150	1755	750～1200	1570～2350	2630
	Rated current	A	3.1～4.8	7.33	3.1～5.0	6.55～9.81	11.1
	EER	Btu/w.h		10.26			10.27
	EER	w/w		3.01			3.01
Heating	Capacity	Btu/h	9000～14000	21000	10000～14000	24000～27000	30000
	Capacity	W	2638～4103	6155	2900～4100	7000～7900	8800
	Input	W	880～1320	2020	900～1350	1800～2600	2750
	Rated current	A	4.0～5.5	9.15	3.76～5.63	7.51～10.9	11.5
	EER	Btu/w.h		10.4			10.91
	EER	w/w		3.05			3.2
Energy Classification			B		B		
Moisture Removal		L/h	0.7～1.2	1.6～2.4	0.7～1.2	1.6～2.4	2.7
Max. input consumption		W	1800	3200	3200		
Max. current		A	13	20	20		
Starting current		A	10				
Compressor	Model		BA160X2CS-20KU		BA160X2CS-20KU		
	Type		Rotary inverter		Rotary inverter		
	Brand		GD Toshiba		GD Toshiba		
	Capacity	Btu/h	18000(60HZ)		18000(60HZ)		
	Input	W	1690（60HZ）		1690（60HZ）		
	Rated current(RLA)	A	11.6（60HZ）		11.6（60HZ）		

	Locked rotor Amp(LRA)	A	60		60		
	Thermal protector		Internal		Internal		
	Capacitor	uF	85UF/250V		85UF/250V		
	Refrigerant oil	ml	RB68AF/α68TF/T-68 750 ml		RB68AF/α68TF/T-68 750 ml		
Outdoor fan motor	Model		YDK53-6M		YDK53-6M		
	Brand		Welling		Welling		
	Input	W	148		148		
	Capacitor	uF	3.0		3.0		
	Speed	r/min	775		775		
Outdoor coil	a.Number of rows		2		2		
	b.Tube pitch(a)x row pitch(b)	mm	25.4×22		25.4×22		
	c.Fin spacing	mm	1.7		1.7		
	d.Fin type (code)		Hydrophilic aluminium		Hydrophilic aluminium		
	e.Tube outside dia.and type	mm	φ9.53 innergroove trube		φ9.53 innergroove trube		
	f.Coil length x height x width	mm	776×660×22		776×660×22		
	g.Number of circuits		2		2		
Outdoor air flow		m3/h	2500		2500		
Outdoor noise level		dB(A)	60		60		
Outdoor unit	Dimension(W*H*D)	mm	845X695X335		845X695X335		
	Packing (W*H*D)	mm	965X772X405		965X772X405		
	Net/Gross weight	Kg	71/74		72/76		
Refrigerant type		R410A g	2100		2250		
Design pressure(Hi/Lo)		MPa	4.2/2.5		4.2/2.5		
	Liquid side/ Gas side	mm(inch)	Φ6.35/Φ9.53	Φ6.35/Φ9.53	Φ6.35/Φ9.53	Φ6.35/Φ9.53	Φ6.35/Φ9.53
Refrigerant piping	Transfer Connector(9.53→12.7)	mm(inch)	2		2		
	Max. refrigerant pipe length	m	20	20	20	20	20
	Max. difference in level	m	10	10	10	10	10
Connection wiring			No				

Plug type		No	
Thermostat type		Electronic control	
Operation temp	℃	17-30	
Ambient temp	℃	17~43(cooling); -7~21(heating)	
Qty'per 20' /40' /40'HQ	set		

Notes:

1. Nominal cooling capacities are based on the following conditions:

Indoor temp: 27°CDB, 19°CWB;

Outdoor temp: 35°CDB;

Equivalent ref. Piping: 8m(horizontal)

2. Nominal heating capacities are based on the following conditions:

Indoor temp: 20°CDB;

Outdoor temp: 7°CDB, 6°CWB;

Equivalent ref. Piping: 8m(horizontal)

3. Actual noise level may differ, depending on the room structure, etc, since these noise values are from an anechoic room.

3 Dimensions

3.1 Alfa Series

a) Indoor unit 7/9K

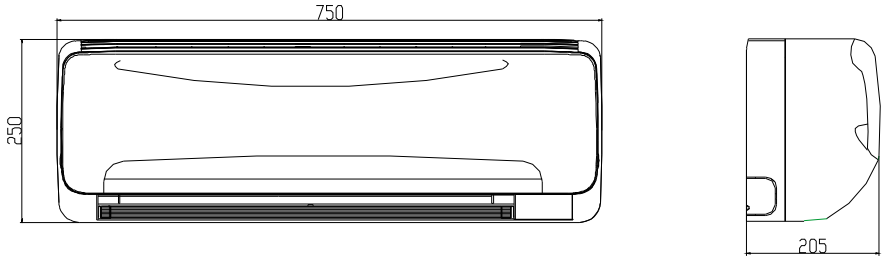

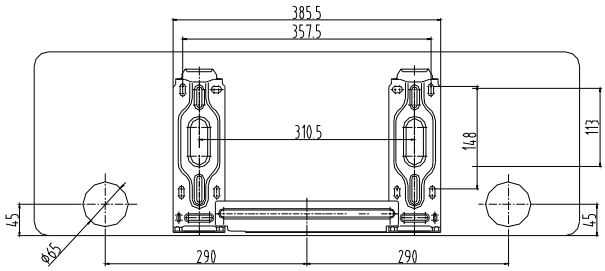

b) Indoor Unit 12K

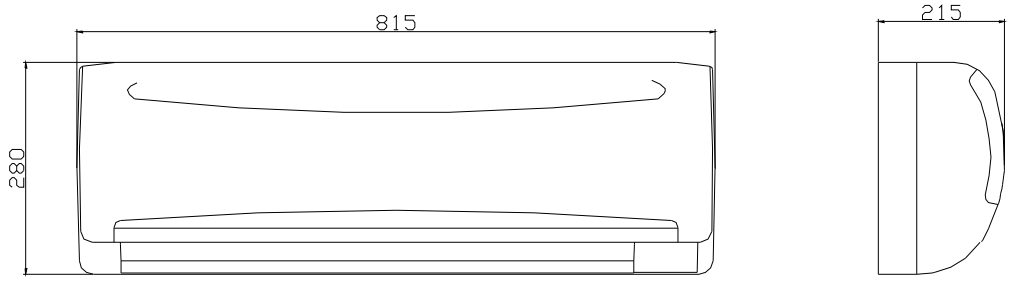

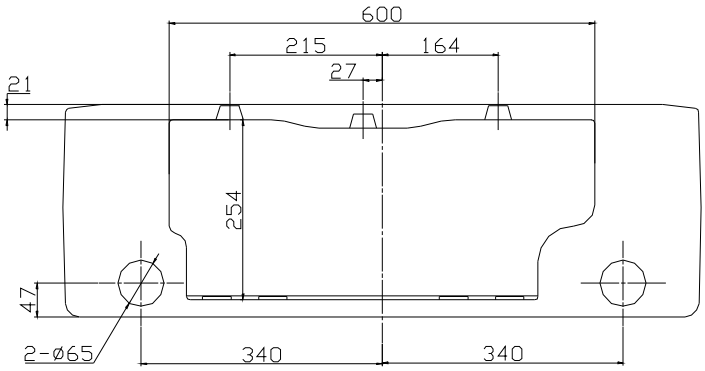

3.2 Outdoor unit

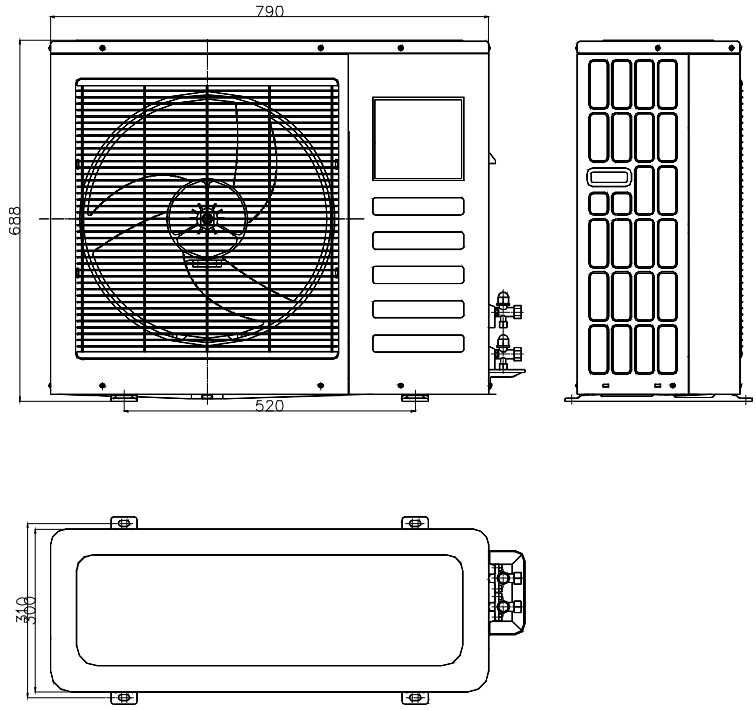

4 Refrigeration Cycle Diagram

4.1 Refrigeration circuit drawing of inverter trinary type

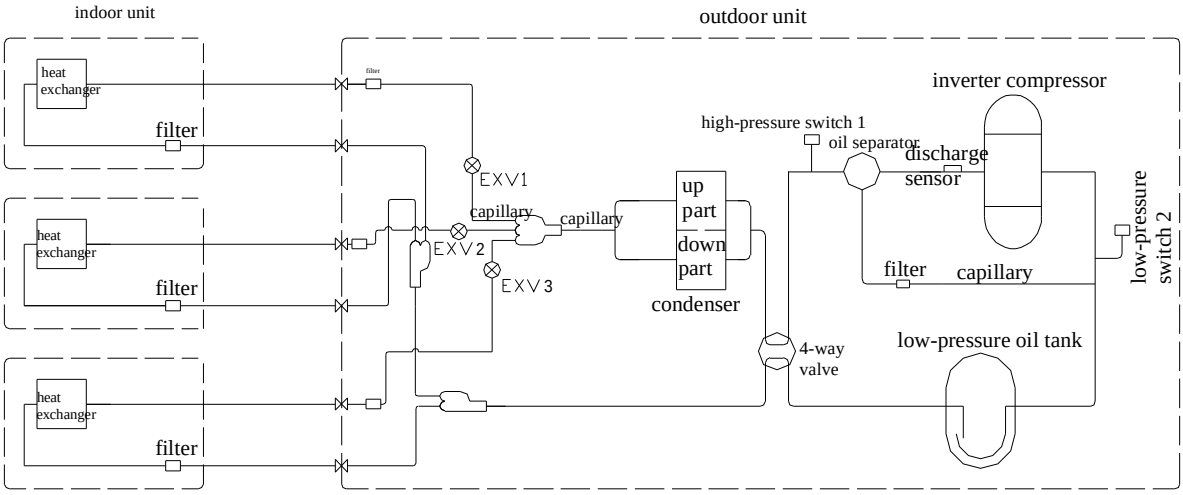

4.2 Refrigeration circuit drawing of inverter binary type

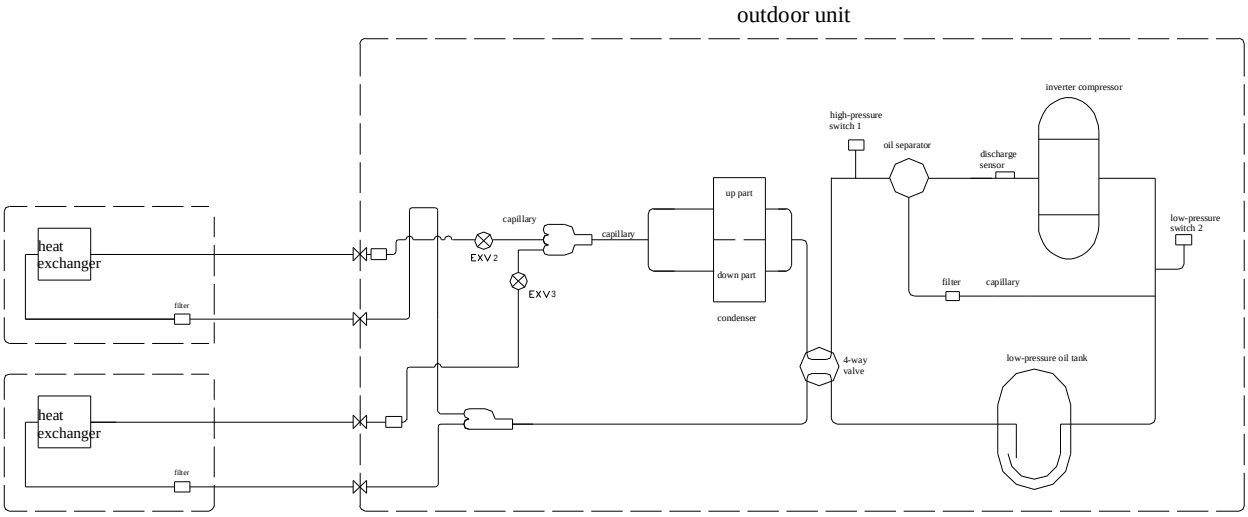

5 Operation Limits

Cooling mode	Indoor temperature	17℃～32℃
	Outdoor temperature	10℃～50℃
Heating mode	Indoor temperature	<=30
	Outdoor temperature	-15℃～33℃
Dry mode	Indoor temperature	10℃～32℃
	Outdoor temperature	0℃～50℃

6. Mode conflict

The indoor units can not work cooling mode and heating at same time.
Heating mode has a priority.

6.1 Definition

	Cooling mode	Heating Mode	Fan	Off
Cooling mode	No	Yes	No	No
Heating Mode	Yes	No	Yes	No
Fan	No	Yes	No	No
Off	No	No	No	No

No: No mode conflict;
Yes: Mode conflict

6.2 In case of one Indoor unit working in cooling mode or fan mode, and another indoor unit is set to heating mode, the indoor unit working in cooling mode or fan mode will change to stand by. The outdoor unit will work in heating mode.

6.3 In case of one Indoor unit working in heating mode, and another indoor unit is set to cooling mode or fan mode, the indoor unit setting to cooling mode or fan mode will change to stand by.

7 Pressure Table

Remark: the pressure is above atmosphere pressure, the pressure is just for reference, because the compressor frequency is different when the indoor room temp. and setting temp. has a different gap.

Mode	Indoor temp	Outdoor temp	Pressure	Three indoor units	Two indoor units	One indoor unit
Cooling	27/19	35/24	Discharge	31.0	28.5	26.0
			Suction	9.5	8.6	7.5
	32/23	43/26	Discharge	37.0	35.2	32.0
			Suction	11.2	10.4	10.0
	32/23	48/26	Discharge	37.0	36.5	34.0
			Suction	11.2	11.0	10.6
Heating	20/15	7/6	Discharge	27.0	27.5	28.0
			Suction	6.5	7.5	7.5
	24/18	27/19	Discharge	32.5	30.0	33.0
			Suction	10.4	11.5	12.4
	20/12	2/1	Discharge	24.5	25.5	26.5
			Suction	5.6	6.1	6.5

8. Wiring Diagram

8.1 Indoor unit (07k/9k/12k)

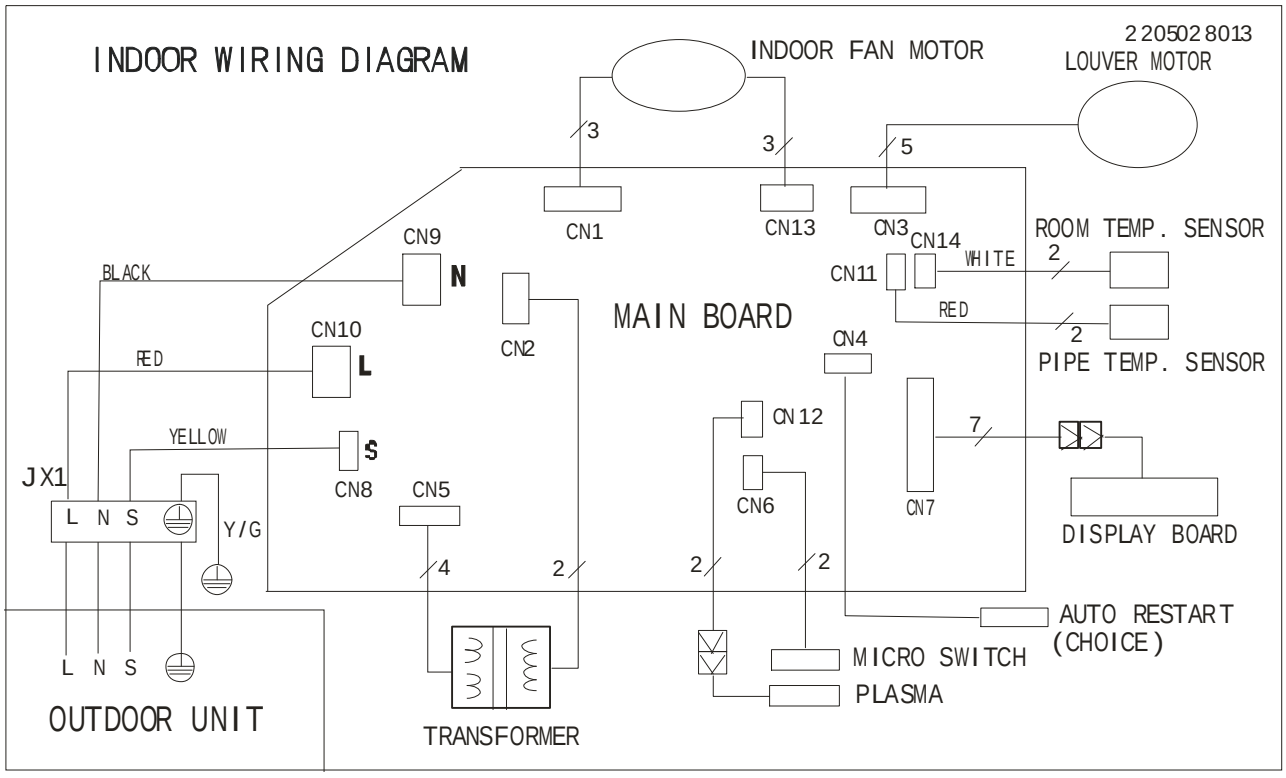

8.2 Outdoor unit SMF-2E18AI

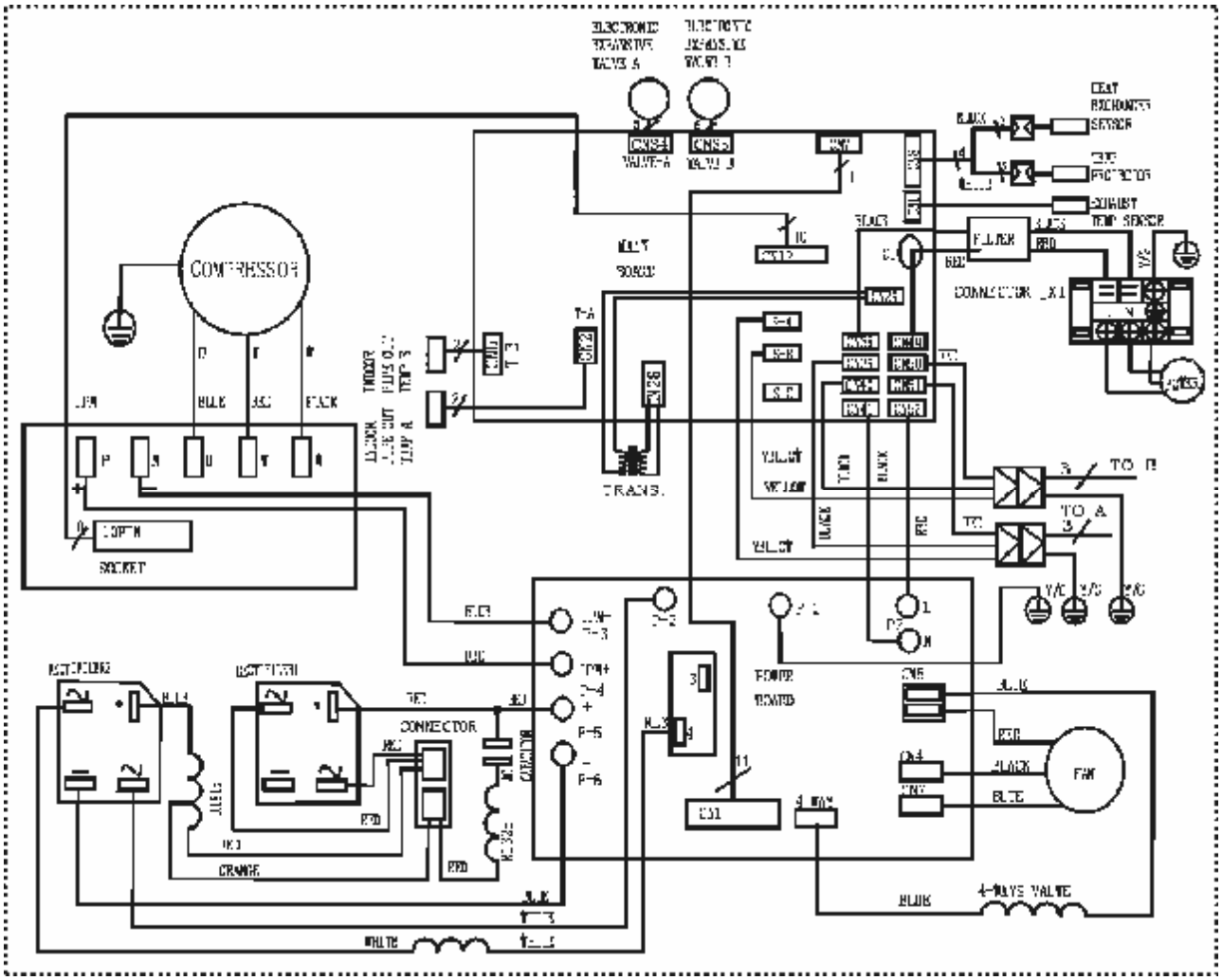

8.3 Outdoor unit SMF-3E27AI

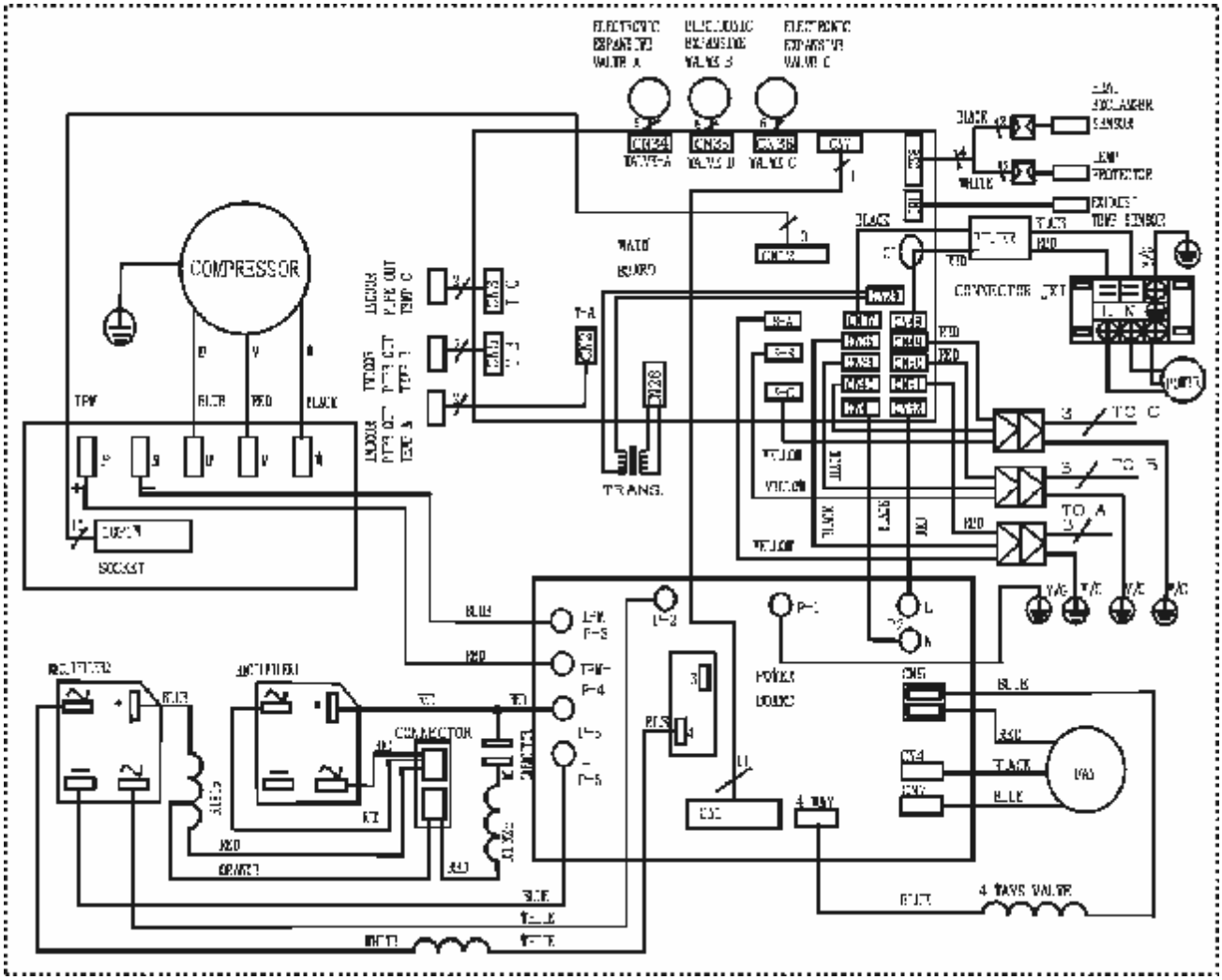

9 Electronic control function

9.1 Electric Control working environment.

9.1.1 Input voltage: 175~253V.

9.1.2 Input power frequency:50Hz.

9.1.3 Indoor fan normal working amp. is less than 1A.

9.1.4 Outdoor fan. Normal working amp. is less than 1.5A.

9.1.5 Four-way valve normal working amp. is less than 1A.

9.1.6 Swing motor: DC12V.

9.2 Display board

INDOOR UNIT DISPLAY PANEL

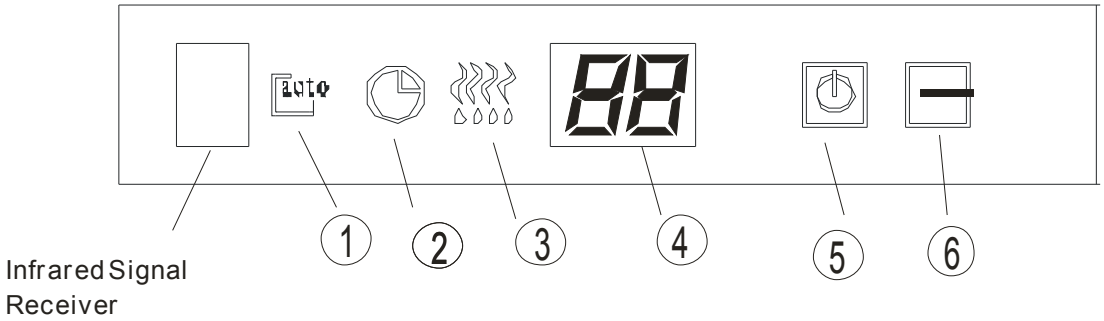

9.2.1 AUTO indicator

This indicator illuminates when the air conditioner is in AUTO operation.

9.2.2 TIMER indicator

This indicator illuminates when TIMER is set ON/OFF.

9.2.3 PRE.-DEF. Indicator (For Cooling & Heating models only)

This indicator illuminates when the air conditioner starts defrosting automatically or when the warm air control feature is activated in heating mode.

9.2.4 TEMPERATURE indicator

a) Usually it displays the temperature settings. When change the setting temperature, this indicator begins to flash, and stops 20 seconds later.

b) It displays the room temperature when the air conditioner is in FAN only operation.

c) When the unit stops operation, it returns to original factory settings.

d) Displays the malfunction code or protection code.

9.2.5 OPERATION indicator

This indicator flashes after power is on and illuminates when the unit is in operation.

9.2.6 SLEEP indicator

This indicator appears when the unit is in Energy-saving operation.

Protection

9.3 minutes delay at restart for compressor.

9.3.1Temperature protection of compressor top, compressor stops when the temp. of top of compressor is more than 120℃, compressor runs when the temp. of top of compressor is less than 105℃.

9.3.2 When AC voltage ≥ 270V for 30 seconds, Outdoor Unit stops operation and alarms. When AC voltage ≤ 260V for 30 seconds, Outdoor Unit resumes operation.

9.3.3 Inverter module protection, Inverter module Protection itself has a protection function against current, voltage and temperature.

9.3.4 Sensor protection at open circuit and breaking disconnection

9.3.5 Fan Speed is out of control. When Indoor Fan Speed is too high(higher than High Fan+300RPM)or too low(lower than 400RPM), the unit stops and LED displays failure information and can't return to normal operation automatically.

9.3.6 Cross Zero signal error warning. If there is no Cross Zero signals in 4 minutes, the unit stops and LED displays failure information and can't return to normal operation automatically.

9.3.7 Current protection: When the current is more than 25A, the compressor stops.

9.3.8 Outdoor condenser high temperature protection: Under cooling mode, if T3>65℃ for 3 minutes, the compressor will stop. When T3<52℃, the protection is not valid.

9.3.9 Outdoor low temperature protection: If the outdoor temperature is lower than -15℃ for 1hour, the compressor and fan motor will stop. If the outdoor temperature is higher than -12℃ for 10 minutes and the compressor stops operation for 1h, or the outdoor temperature is higher than 5℃ for 10 minutes, then restart and enter into the prior operation mode.

9.3.10 Compressor pre-heating function: When the outdoor temperature is lower than 3℃ and the compressor stops operation for more than 3 hours, or the outdoor temperature is lower than 3℃ and the power is just put on, the compressor enters into pre-heating condition. When outdoor temp. is more than 5℃ or user operate it, pre-heating condition will finish.

9.4 Fan-only mode

Fan speed is high/mid/low/ Auto

9.5 Cooling mode

9.5.1Indoor fan keeps running, fan speed can be set in high/mid/low/ Auto :

9.5.2 Auto fan at cooling mode: (T=Indoor Temp.-Setting Temp.)

	Condition	Indoor fan speed
Room temp. up	T<1.5℃	Low
	1.5℃<T<4℃	Mid.
	T>4℃	High
Room temp. down	T> 3℃	High
	1℃<T<3℃	Mid.
	T<1℃	Low

9.5.3Anti-freezing control to indoor evaporator at cooling mode(T: evaporator temp.)

	Evaporator Temp.	Compressor
	T< 4℃	Off
	T > 8℃	On

9.6 Dehumidifying mode

9.6.1 the indoor fan is fixed in low speed

9.6.2 Low room temperature protection:

When room temperature decreases to below 10℃, indoor fan stop, when room temperature restores to over 12℃, indoor fan start.

9.6.3 At dehumidifying mode, the anti-freezing function of the indoor heat exchanger is the same as that of cooling mode.

9.7 Heating mode

9.7.1 Indoor Fan actions at heating mode

Indoor Fan can be set at HIGH/MID/LOW/AUTO by using a remote controller, but Anti-cold wind function prevails.

Anti-cold wind control function at heating mode

	Condition T= Indoor exchanger temp.	Indoor fan speed
Indoor exchanger temp. up	T<34℃	Off
	34℃<T<37℃	Breeze
	37℃<T<44℃	Low speed
	T> 44℃	Setting fan speed
Indoor exchanger temp. down	T> 38℃	Setting fan speed
	33℃<T<38℃	Low speed
	24℃<T<33℃	Breeze
	T<24℃	Off

9.7.2 Auto wind at heating mode

	Condition T=Indoor Temp.-Setting Temp.	Indoor fan speed
Room temp. up	T<1.5℃	High
	1.5℃<T<2.5℃	Mid.
	T>2.5℃	Low
Room temp. down	T<1.0℃	High
	1.0℃<T<2.0℃	Mid.
	T>2.0℃	Low

9.7.3 Indoor evaporator high-temperature protection at heating mode

Condition T= Indoor exchanger temp.	Compressor
T<48℃	On
53℃<T<63℃	Decrease frequency of compressor
T>63℃	Off

9.8 Defrosting operation (Available for heating only).

9.8.1 Defrosting condition:

The temperature of outdoor heat exchanger remains consecutively lower than -2°c for more than 40 minutes,

9.8.2 Ending condition of defrosting

If one of following conditions is satisfied, end the defrost and turn into heating mode:

a. The defrost time has reached to 10 minutes.

b. When the temperature of outdoor heat exchanger rises up to 15°C

9.8.3 Defrosting Actions:

a. Compressor runs.

b. 4 way valve switches off,

c. Outdoor fan switches off

d. Indoor fan running according to anti-cold wind function in heating mode.

9.9 Automatic operation mode

The air conditioner automatically selects one of the following operation modes: cooling, heating or fan only according to the temp. difference between room temp. (TA) and set temp. (TS).

TA—TS	Operation mode
TA—TS>2℃	Cooling
-1℃≤TA-TS≤+2℃	Fan-only
TA-TS<-1℃	Heating (air-only for cooling only type)

9.10 Manual switch

9.10.1 Mode changes when push this button.

Cooing mode **à** Auto mode **à** Unit off **à** Cooing mode

9.10.2 At Cooing mode, after 30 minutes cooling operation whose fan speed is set as low, the A/C operates with a setting temp. of 24℃.

9.10.3 At auto mode, the A/C operates with a set temp. of 24℃

9.11 Timer Function

9.11.1 The maximum length of timer is 24 hours and the minimum resolving power is 15 minutes.

9.11.2 Timer on: first turn off the A/C, the A/C will be automatically on at the set time.

9.11.3 Timer off: first turn on the A/C, the A/C will be automatically off at the set time

9.11.4 Timer on/off function(on time is earlier than off time): first turn off the A/C, it will be automatically on at set time, and later be off at the set time, then unit turns on at set time.

9.11.5 Timer off/on function(off time is earlier than on time): first turn on the A/C, it will be automatically off at set time, and later be on at the set time, then unit turns off at set time.

9.12 Sleep mode

9.12.1 It is available at cooling, heating or auto mode.

9.12.2 Cooling:

The set temperature rise 1℃ per hour. Two hours later, the set temperature will maintain as a constant and the fan speed is kept at low speed.

9.12.3 Heating:

The set temperature decrease 1℃ per hour. Two hours later, the set temperature will maintain as a constant and the air circulation is kept at low speed (Cold air proof function takes precedence over all).

9.12.4 Auto:

The Sleep Mode running function operates in accordance with selected running mode by auto mode.

9.12.5 After 7 hours, unit cancels this mode automatically.

Jump2	On	On	Off	Off
Jump3	On	Off	On	Off
Stop time	7 hours	8 hours	6 hours	7 hours

9.13 Auto restart function

In case of a sudden power failure, this function automatically sets the unit to previous settings before the power failure when power returns.

9.14 Plasma

Plasma turns on when the indoor fan runs.

Plasma turns off automatically when front panel is opened.

10 Troubleshooting table for outdoor LED

Display	Explanation
E0	EEPROM error
E1	Indoor and outdoor communication error
E2	Zero-crossing examination error
E3	Fan speed beyond control
E5	Outdoor units temp. sensor or connector of temp. sensor is defective
E6	Indoor units temp. sensor or connector of temp. sensor is defective
P0	Inverter module protection
P1	Outdoor voltage protection
P2	Compressor top protection against temperature
P3	Compressor current protection
P5	Outdoor low temp. protection

11 Troubleshooting for outdoor unit

11.1 Safety

Because of there are capacitors in PCB and relative circuit in outdoor unit, even shut down the power supply, electricity power still are kept in capacitors, do not forget to discharge the electricity power in capacitor.
The value of resistance is about 1500 ohms to 2000 ohms.

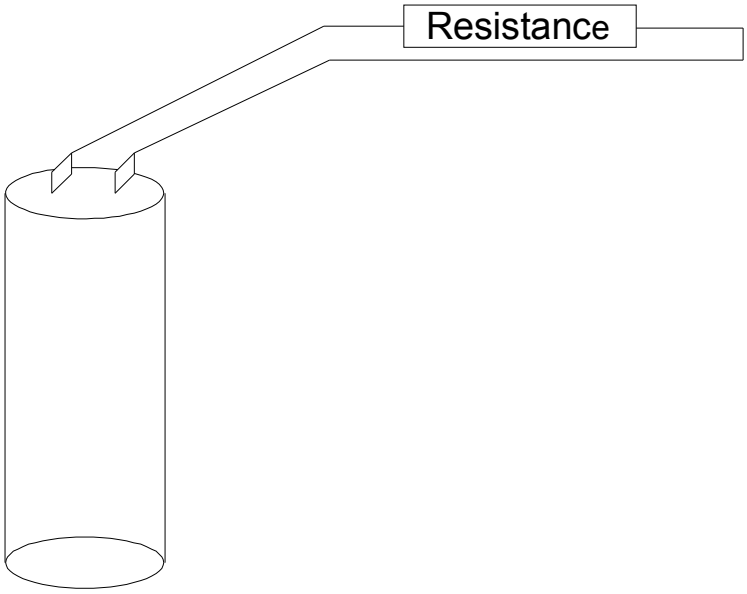

The voltage in P3 and P4 in outdoor PCB is high voltage about 310V
The voltage in P5 and P6 in outdoor PCB is high voltage about 310V

11.2 Digital display in outdoor PCB

There is a digital display in outdoor PCB.

Push switch SW1 to check the states of unit when the unit is running, digital display procedure is as following when push SW1 each time

Frequency of compressor →Running mode → Capacity need→ Number of indoor unit → Outdoor temp. → outdoor pipe temp. → current of outdoor unit → No. 1 opening degree of electronic expansion valve → No. 2 opening degree of electronic expansion valve → No. 3 opening degree of electronic expansion valve →Frequency of compressor

11.2.1 Frequency of compressor:

Display	Frequency of compressor (Hz)
30	30
--	Stand by
60	60

11.2.2 Running mode:

Display	Corresponding mode
0	Off
1	Cooling mode
2	Heating mode

11.2.3 Capacity need:

Cooling mode

Capacity	2000-2500	2000-2500	3000-3800	4500-5000	5000-5500	5500-6100	6100-7000	7000-7500	7500-8000	7500-8000
Corresponding Code	1	2	3	4	5	6	7	8	9	>=10

Heating mode

Capacity	2000-2500	2000-2500	3000-3800	4500-5000	5500-6100	6100-7000	6100-7000	7000-7500	7500-8000	8000-8900
Corresponding Code	1	2	3	4	5	6	7	8	9-10	>=11

Note:

The capacity is just for reference.

11.2.4 Number of indoor unit

Display	Number of indoor unit
1	1
2	2
3	3

11.2.5 Outdoor temp:

Display	Corresponding temp.		Display	Corresponding temp.		Display	Corresponding temp.
15	-7.5		50	10		80	25
16	-7		51	10.5		81	25.5
17	-6.5		52	11		82	26
18	-6		53	11.5		83	26.5
19	-5.5		53	11.5		84	27
20	-5		54	12		85	27.5
21	-4.5		55	12.5		86	28
22	-4		56	13		87	28.5
23	-3.5		57	13.5		88	29
24	-3		58	14		89	29.5
26	-2		59	14.5		90	30
27	-1.5		60	15		91	30.5
28	-1		61	15.5		92	31
29	-0.5		62	16		93	31.5
30	0		63	16.5		93	31.5
31	0.5		63	16.5		94	32
32	1		64	17		95	32.5
33	1.5		65	17.5		96	33
34	2		65	17.5		97	33.5
35	2.5		66	18		98	34
36	3		67	18.5		99	34.5
37	3.5		68	19			
38	4		69	19.5			
39	4.5		70	20			
40	5		71	20.5			
41	5.5		72	21			
42	6		73	21.5			
43	6.5		74	22			
44	7		75	22.5			
45	7.5		75	22.5			
46	8		76	23			
47	8.5		77	23.5			
48	9		78	24			
49	9.5		79	24.5			

11.2.6 Outdoor pipe temp.
Refer to 11.2.5
11.2.7 Current of outdoor unit

Display	Corresponding mode
44	6.0 A
46	6.2 A
54	7.4 A
55	7.6 A
58	7.6 A
62	8.0 A
66	8.6 A
67	8.8 A
68	9.0 A
70	9.2 A
72	9.5 A
76	10.0 A
78	10.2 A
80	10.4 A
82	10.6 A
84	11.0 A
88	11.6 A
92	12.0 A
94	12.2 A

11.2 8 No. 1 opening degree of electronic expansion valve:
Opening degree equals the display data times 8

11.2.9 No. 2 opening degree of electronic expansion valve:
Opening degree equals the display data times 8

11.2.10 No. 3 opening degree of electronic expansion valve:
Opening degree equals the display data times 8

11.3 In standby , The LED displays “——”,
11.4 In compressor operation, the LED display the frequency,
11.5 In defrosting mode, The LED displays “dF”
11.6 In compressor pre-heating, The LED displays “1 1”

11.7 Errors and protections

Display	Explanation
E0	EEPROM error
E1	No 1 Indoor units pipe temp. sensor or connector of pipe temp. sensor is defective
E2	No 2 Indoor units pipe temp. sensor or connector of pipe temp. sensor is defective
E3	No 3 Indoor units pipe temp. sensor or connector of pipe temp. sensor is defective
E4	Outdoor units temp. sensor or connector of temp. sensor is defective
E5	Compressor voltage protection
E7	Indoor and outdoor communication error
P0	Compressor top protection against temperature
P3	Compressor current protection
P4	Inverter module protection
P5	Outdoor low temp. protection
P6	Condenser high-temperature protection

11.8 Troubleshooting

Display	Explanation
E0	EEPROM error

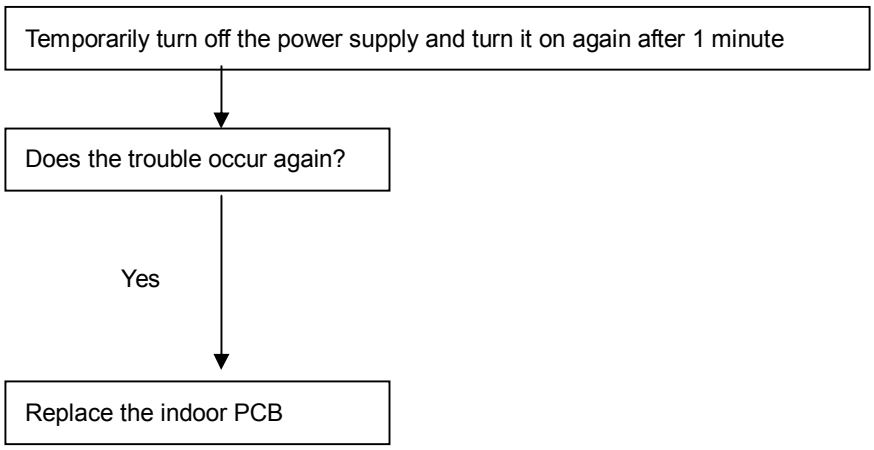

Display	Explanation
E1	No 1 Indoor units pipe temp. sensor or connector of pipe temp. sensor is defective

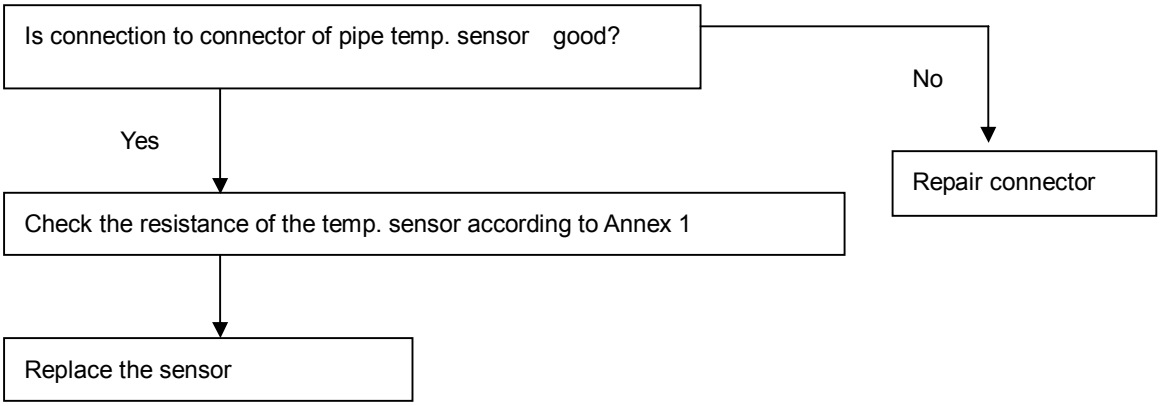

Display	Explanation
E2	No 2 Indoor units pipe temp. sensor or connector of pipe temp. sensor is defective

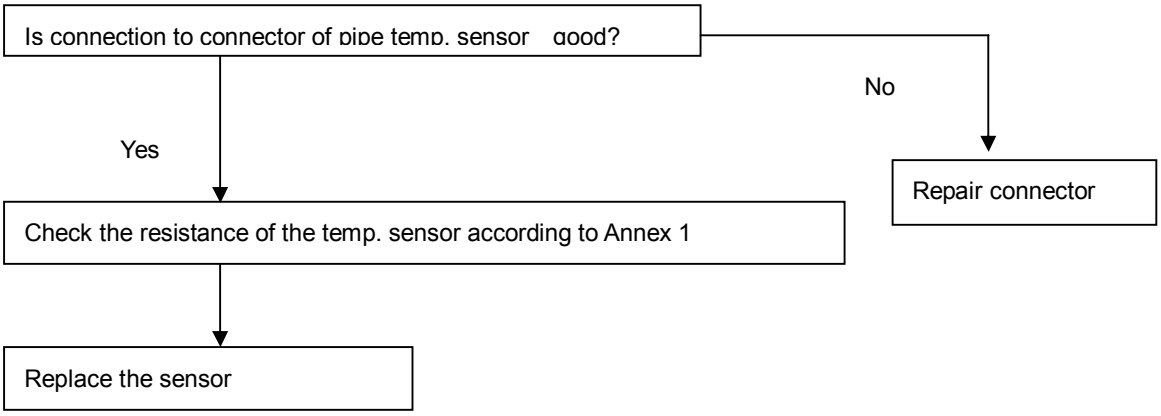

Display	Explanation
E3	No 3 Indoor units pipe temp. sensor or connector of pipe temp. sensor is defective

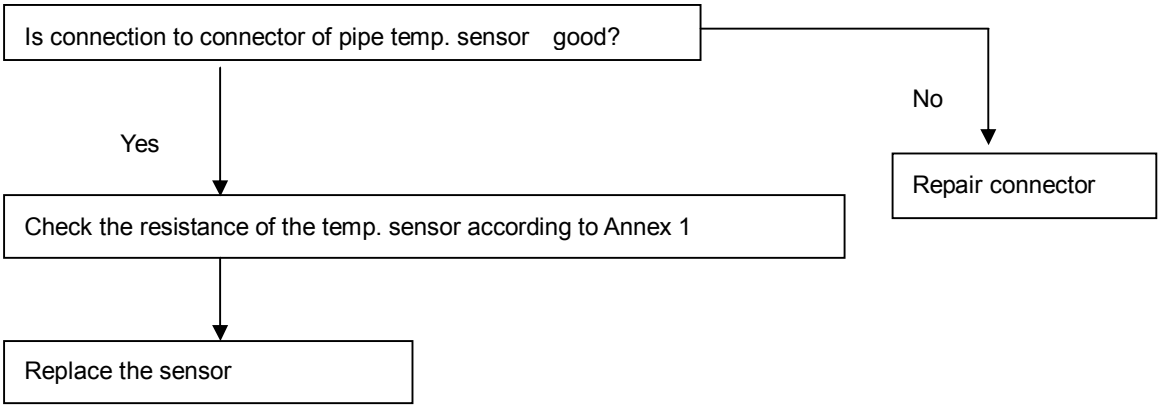

Display	Explanation
E4	Outdoor units temp. sensor or connector of temp. sensor is defective

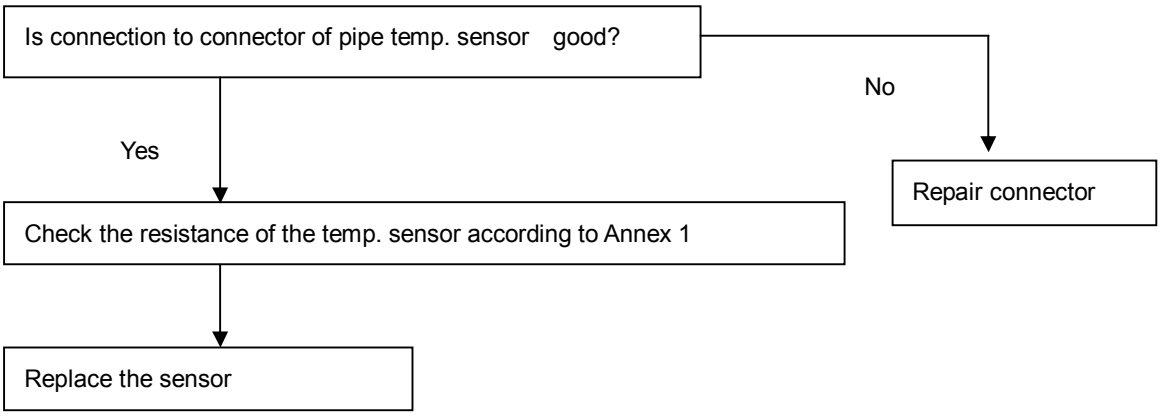

Display	Explanation
E5	Compressor voltage protection

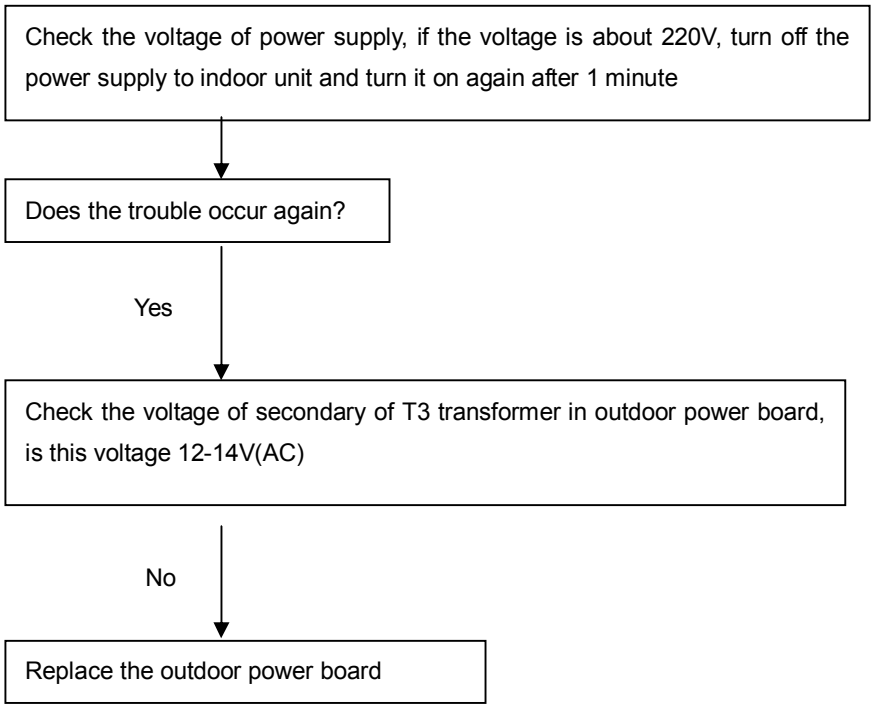

Display	Explanation
E7	Indoor / outdoor units communication protection

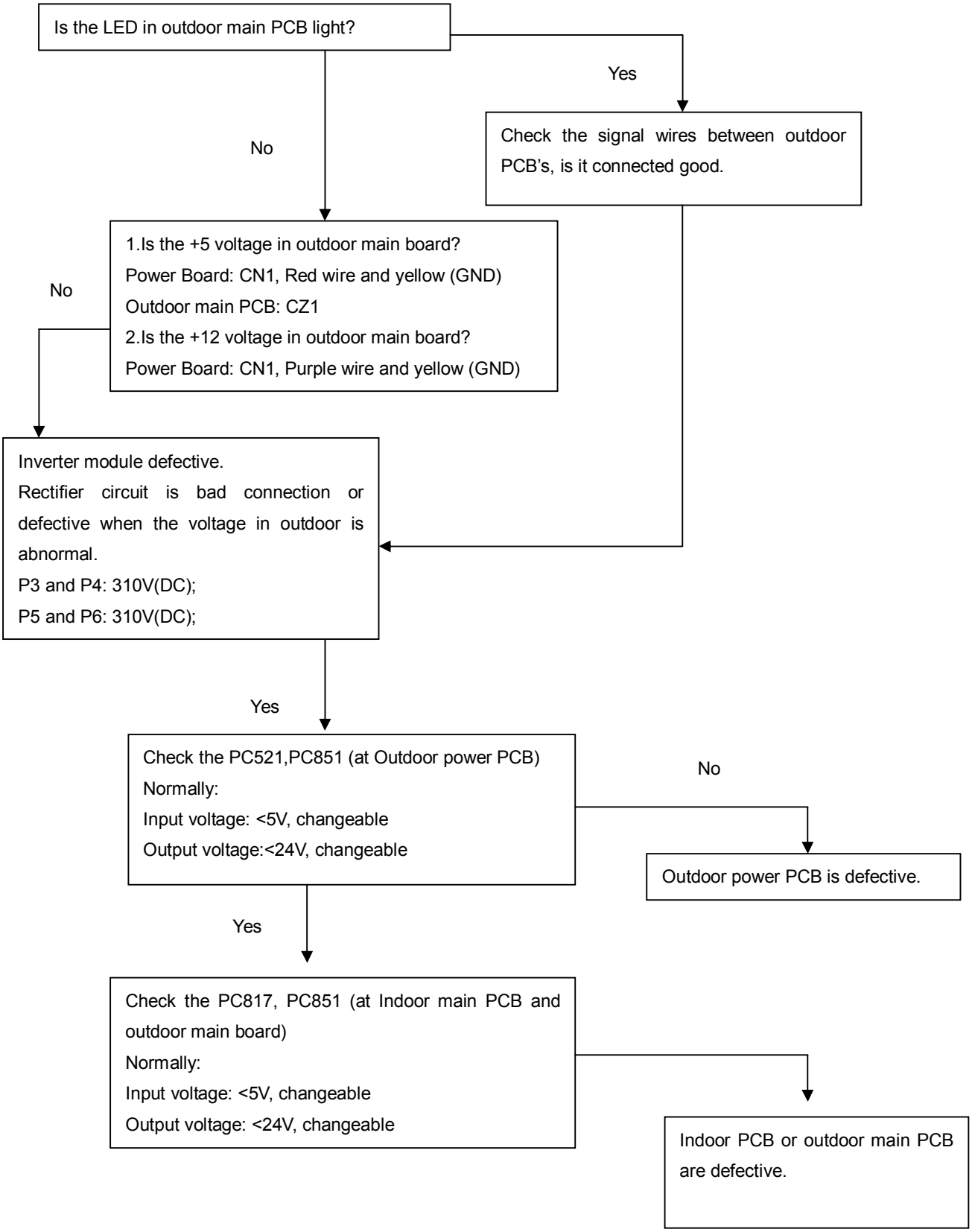

Display	Explanation
P0	Compressor top protection against temperature

Off: 120℃; On: 105℃

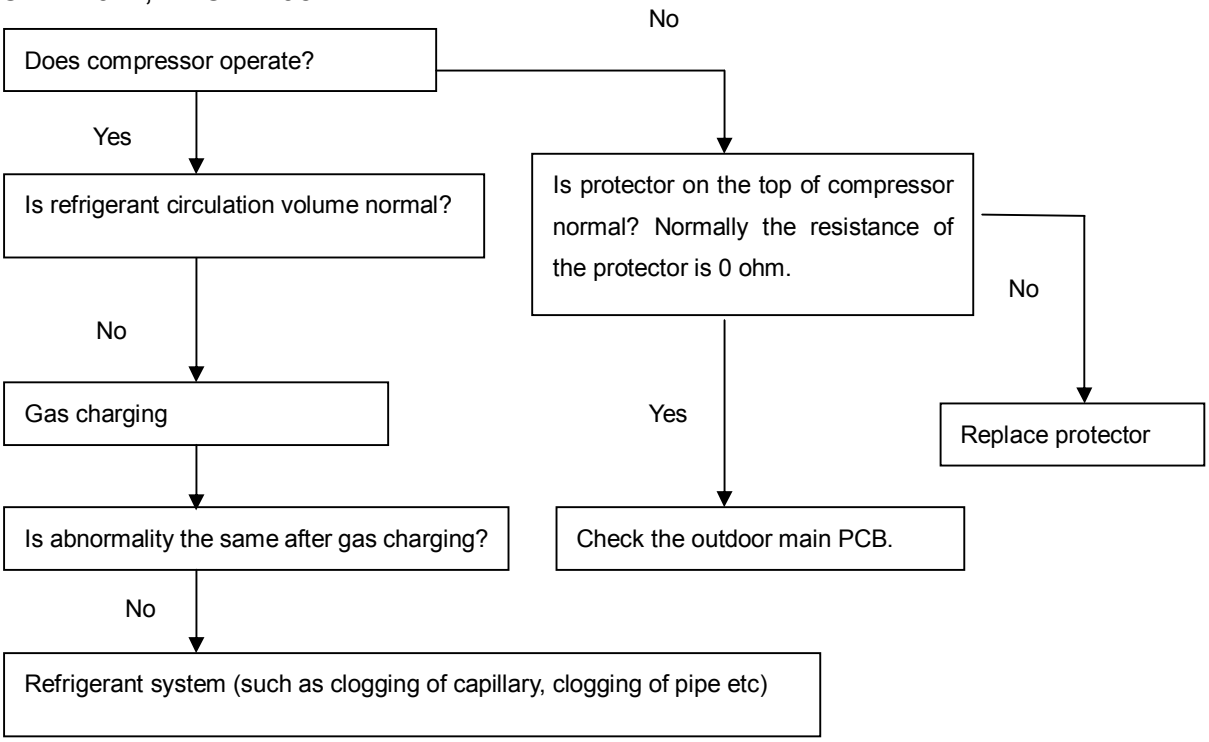

Display	Explanation
P3	Compressor current protection

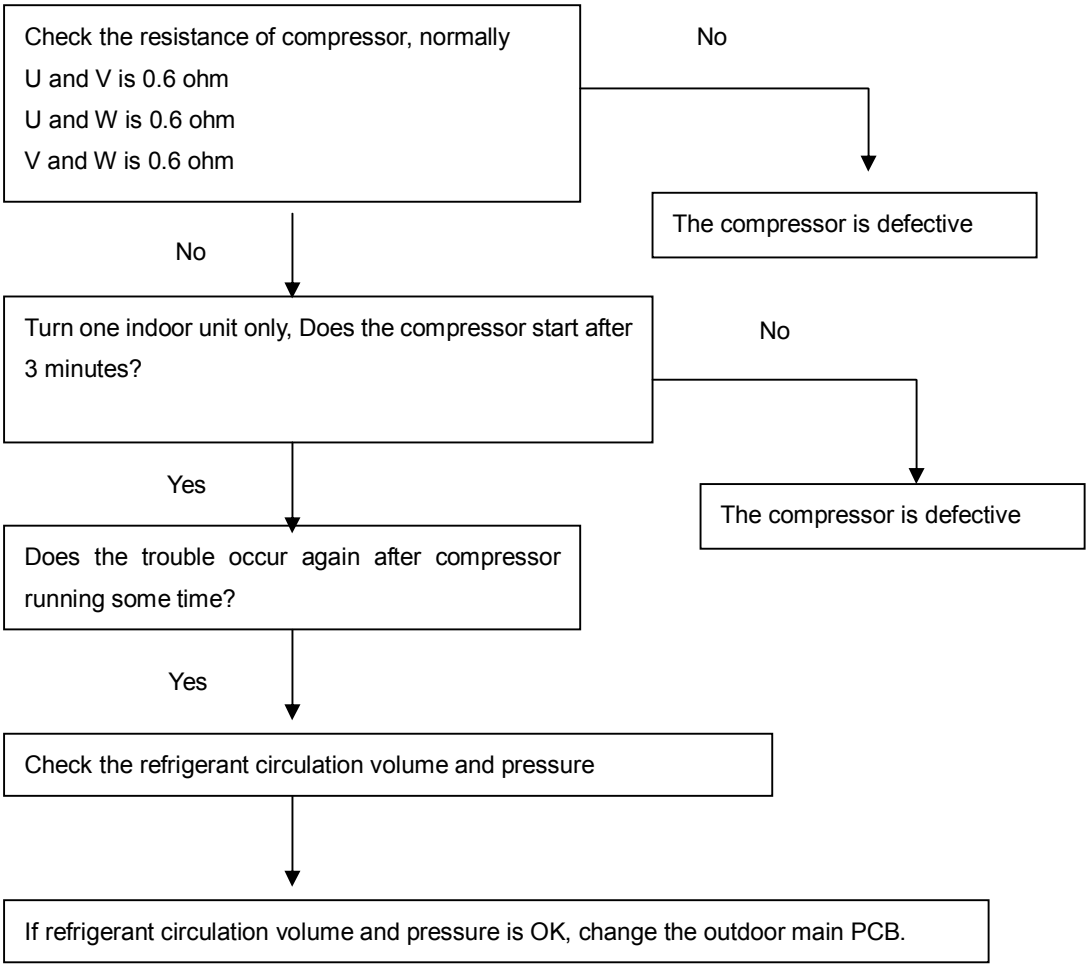

Display	Explanation
P4	Inverter module protection

Check the connectors CN12, CN7, CN1 in outdoor PCBs
Is connection to connector good?

No → Repair connector

Yes ↓

Is the wires to compressor right

Yes ↓

Check the outdoor inverter module.

Is it breakdown between P-N,P-U,P-V;N-W,N-U,N-V
At inverter module
Normally,
P-N: ~1.0MΩ
P-U: ~2.0MΩ
P-V: ~2.0MΩ
P-W: ~2.0MΩ
N-W: ~1.0MΩ
N-U: ~1.0MΩ
N-V: ~1.0MΩ

Yes → Inverter module is defective

No ↓

Check compressor
1.Turn on the unit in cooling or heating in different season, use a frequency meter to test the frequency in one of the three wires to compressor, if there is frequency in wires, but compressor do not run, the compressor is defective.
2.Between U,V, W three terminals , the resistance is about 0.6 Ω.

Display	Explanation
P5	Outdoor low temp. protection

This is optional, factory standard unit does not have this function.

Unit stops when outdoor temp. is lower than -15°C and lasting time more than 60 minutes, and unit runs again when outdoor temp. more than -12°C.

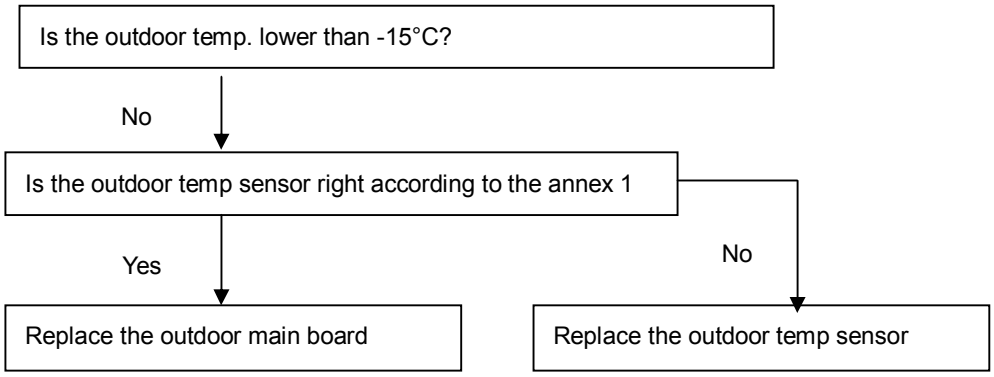

Display	Explanation
P6	Condenser high-temperature protection

When outdoor pipe temp. is more than 65°C, the unit will stop, and unit runs again when outdoor pipe temp. is less than 52°C.

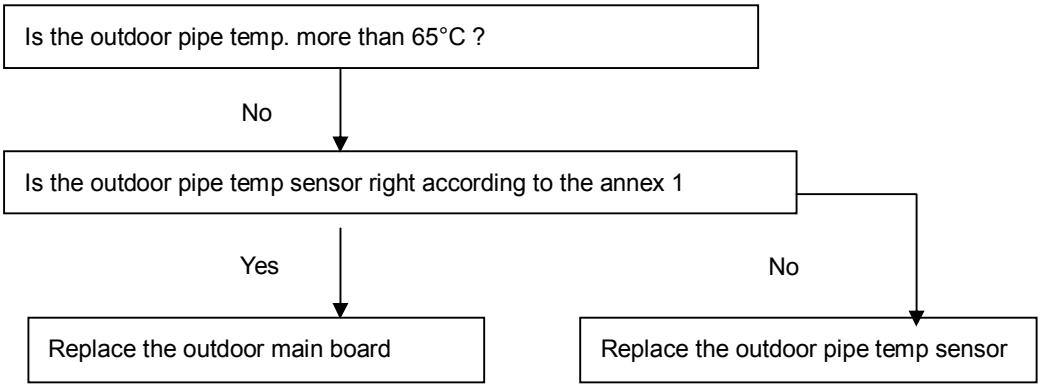

12 Exploded view

12.1 SMF-H07AI

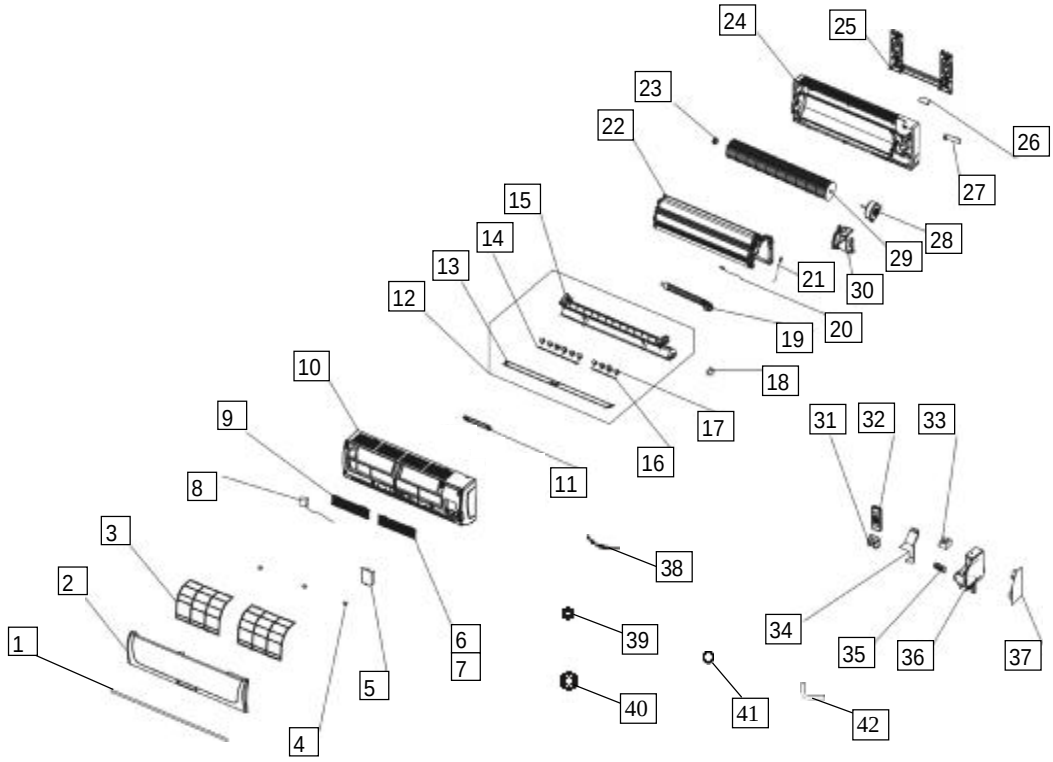

No.	Part Name	Quantity	Sale code	BOM Code
1	Decoration bar	1	12909121001	2113019180
2	Front panel	1	53409121004	2113019186
3	Air filter	2	12909121003	2113019176
4	Screw cap	1	12909121004	2113019178
5	Window cover for repairing	1	12909121005	2113039183
6	Air cleaner	1	10109121226	2113010212
7	Air cleaner holder	1	10109121225	2113010217
8	Power for plasma	1	12909121006	2231990108
9	Plasma	1	12909121007	2231990107
10	Panel frame	1	11209121002	2113019124
11	Display board	1	12909121009	2333019075
12	Air out frame assembly	1	11209121003	2113019219
13	Horizontal louver	1	12909121011	2113019183
14	Louver holder I	1	15007111011	2113031305
15	Air out frame	1	12909121012	2113019184
16	Louver holder II	1	15007111013	2113031306
17	Vertical louver	10	15007111014	2113031365
18	Louver motor	1	10121121218	2240020006
19	Drain hose	1	10109121215	2113000001
20	Indoor temp sensor	1	10109121243	2243069052

21	Evaporator temp sensor	1	10109121242	2243069051
22	Evaporator	1	13107111002	2153019040
23	Bearing seat	1	10309121220	2273010201
24	Chassis	1	15007111017	2113031342
25	Installation plate	1	15007111018	2123031332
26	Back cover for chassis	1	10309121223	2113010216
27	Clamp for connecting pipe	1	10309121225	2113010204
28	Fan motor	1	10309121226	2240030005
29	Cross flow fan, assembly	1	10309121221	2113010219
30	Motor cover	1	10309121227	2113010203
31	Holder for remote controller	1	12909121015	2115506704
32	Remote Controller	1	15007111021	2335509182
33	Transformer	1	12909121016	2230099038
34	Cover for E-parts box	1	13007111003	2113019182
35	Wire joint, 5p	1	10124121203	2230145023
36	E-Parts box	1	11609121007	2113159004
37	Main control board	1	53407121001	2135029058
38	Wire clamp	1	10112121234	2113521303
39	Copper nut, TLM-A01	1	10909121012	2160032000
40	Copper nut, TLM-B02	1	10909121013	2160032001
41	Sealing ring	1	31009321021	2272009001
42	Connection pipe for drainage	1	11609121003	2110102011

12.2 SMF-H09AI

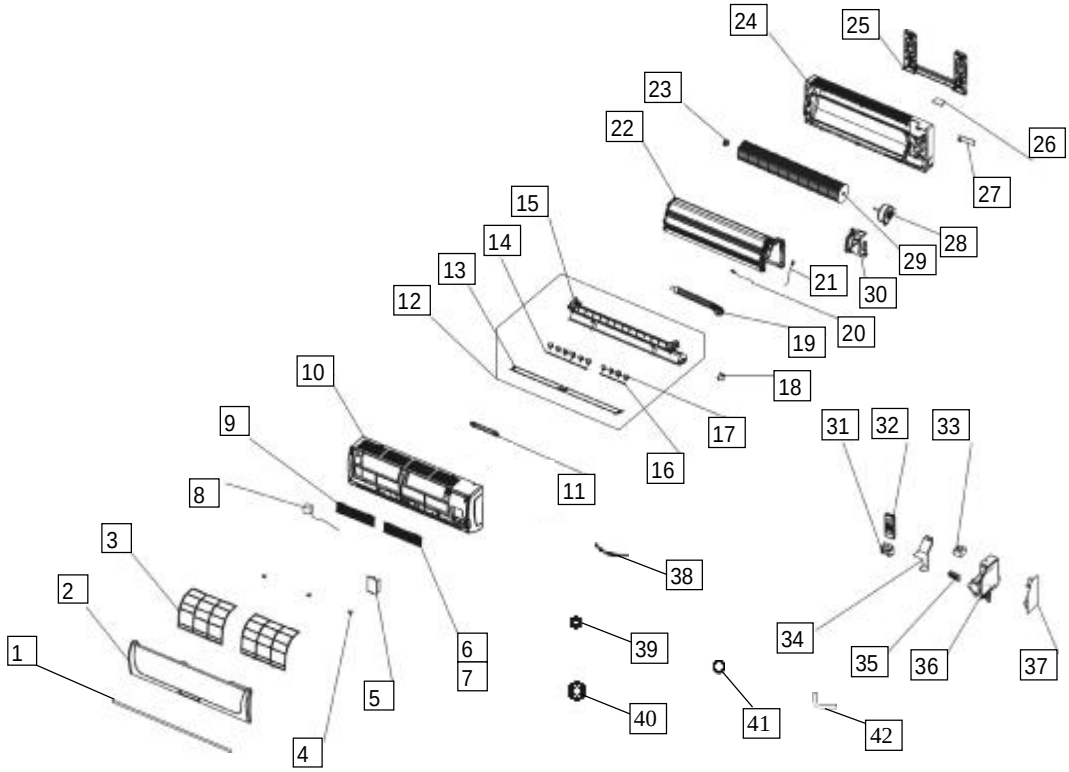

No.	Part Name	Quantity	Sale code	BOM Code
1	Decoration bar	1	12909121001	2113019180
2	Front panel	1	53409121004	2113019186
3	Air filter	2	12909121003	2113019176
4	Screw cap	3	12909121004	2113019178
5	Window cover for repairing	1	12909121005	2113039183
6	Air cleaner	1	10109121226	2113010212
7	Air cleaner holder	1	10109121225	2113010217
8	Power for plasma	1	12909121006	2231990108
9	Plasma	1	12909121007	2231990107
10	Panel frame	1	11209121002	2113019124
11	Display board	1	12909121009	2333019075
12	Air out frame assembly	1	11209121003	2113019219
13	Horizontal louver	1	12909121011	2113019183
14	Louver holder I	1	15007111011	2113031305
15	Air out frame	1	12909121012	2113019184
16	Louver holder II	1	15007111013	2113031306
17	Vertical louver	10	15007111014	2113031365
18	Louver motor	1	10121121218	2240020006
19	Drain hose	1	10109121215	2113000001
20	Indoor temp sensor	1	10109121243	2243069052
21	Evaporator temp sensor	1	10109121242	2243069051
22	Evaporator	1	12909121013	2153019034
23	Bearing seat	1	10309121220	2273010201
24	Chassis	1	15007111017	2113031342
25	Installation plate	1	15007111018	2123031332
26	Back cover for chassis	1	10309121223	2113010216
27	Clamp for connecting pipe	1	10309121225	2113010204
28	Fan motor	1	10309121226	2240030005
29	Cross flow fan, assembly	1	10309121221	2113010219
30	Motor cover	1	10309121227	2113010203
31	Holder for remote controller	1	12909121015	2115506704
32	Remote Controller	1	15007111021	2335509182
33	Transformer	1	12909121016	2230099038
34	Cover for E-parts box	1	13007111003	2113019182
35	Wire joint, 5p	1	10124121203	2230145023
36	E-Parts box	1	11609121007	2113159004
37	Main control board	1	53409121003	2135029056
38	Wire clamp	1	10112121234	2113521303
39	Copper nut, TLM-A01	1	10909121012	2160032000
40	Copper nut, TLM-B02	1	10909121013	2160032001
41	Sealing ring	1	31009321021	2272009001
42	Connection pipe for drainage	1	11609121003	2110102011

12.3 SMF-H12AI

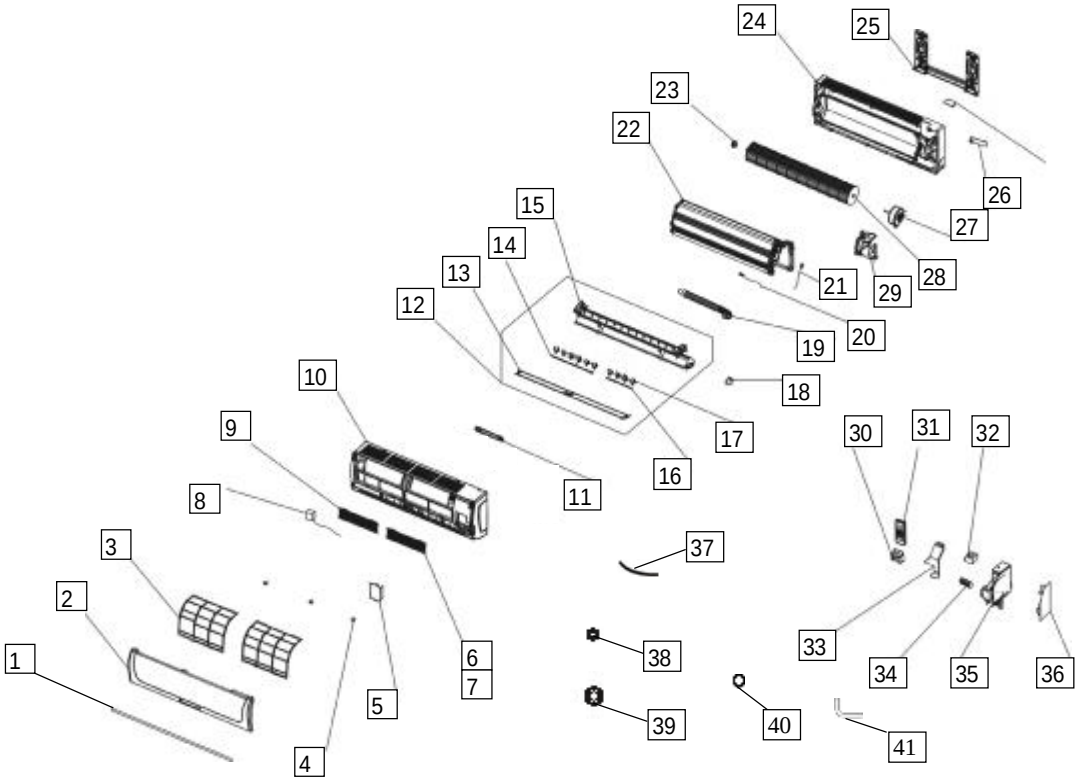

No.	Part Name	Quantity	Sale code	BOM Code
1	Decoration bar	1	12912121001	2113049070
2	Front panel	1	53412121003	2113049078
3	Air filter	2	12912121003	2113049067
4	Screw cap	3	12912121004	2113049066
5	Window cover for repairing	1	12912121005	2113049065
6	Air cleaner	1	10109121226	2113010212
7	Air cleaner holder	1	10109121225	2113010217
8	Power for plasma	1	12909121006	2231990108
9	Plasma	1	12909121007	2231990107
10	Panel frame	1	11212121002	2113049079
11	Display board	1	12909121009	2333019075
12	Air out frame assembly	1	12912121007	2113049073
13	Horizontal louver	1	12912121008	2113049074
14	Louver holder	1	12912121009	2113049075
15	Air out frame	1	12912121010	2113049076
16	Louver holder	1	12912121009	2113049075
17	Vertical louver	10	12912121012	2113051553
18	Louver motor	1	10121121218	2240020006
19	Drain hose	1	10112121213	2110102007
20	Indoor temp sensor	1	10109121243	2243069052
21	Evaporator temp sensor	1	10109121242	2243069051

22	Evaporator	1	12812111001	2153029010
23	Bearing seat	1	10309121220	2273010201
24	Chassis	1	10312121214	2113132302
25	Installation plate	1	10312121215	2123050005
26	Clamp for connecting pipe	1	10309121225	2113010204
27	Fan motor	1	10312121216	2240030213
28	Cross flow fan, assembly	1	10312121213	2110020008
29	Motor cover	1	11609111805	2113132314
30	Holder for remote controller	1	10718121009	2113139022
31	Remote Controller	1	12909121015	2115506704
32	Transformer	1	15007111021	2335509182
33	Cover for E-parts box	1	10312121224	2113139036
34	Wire joint, 5p	1	10109121244	2230145064
35	E-Parts box	1	10312121223	2113139141
36	Main control board	1	53412121004	2135029057
37	Wire clamp	1	10309121235	2113010209
38	Copper nut, TLM-A01	1	10909121012	2160032000
39	Copper nut, TLM-C03	1	10912121019	2160032002
40	Sealing ring	1	31009321021	2272009001
41	Connection pipe for drainage	1	11609121003	2110102011

12.4 SMF-2E18AI

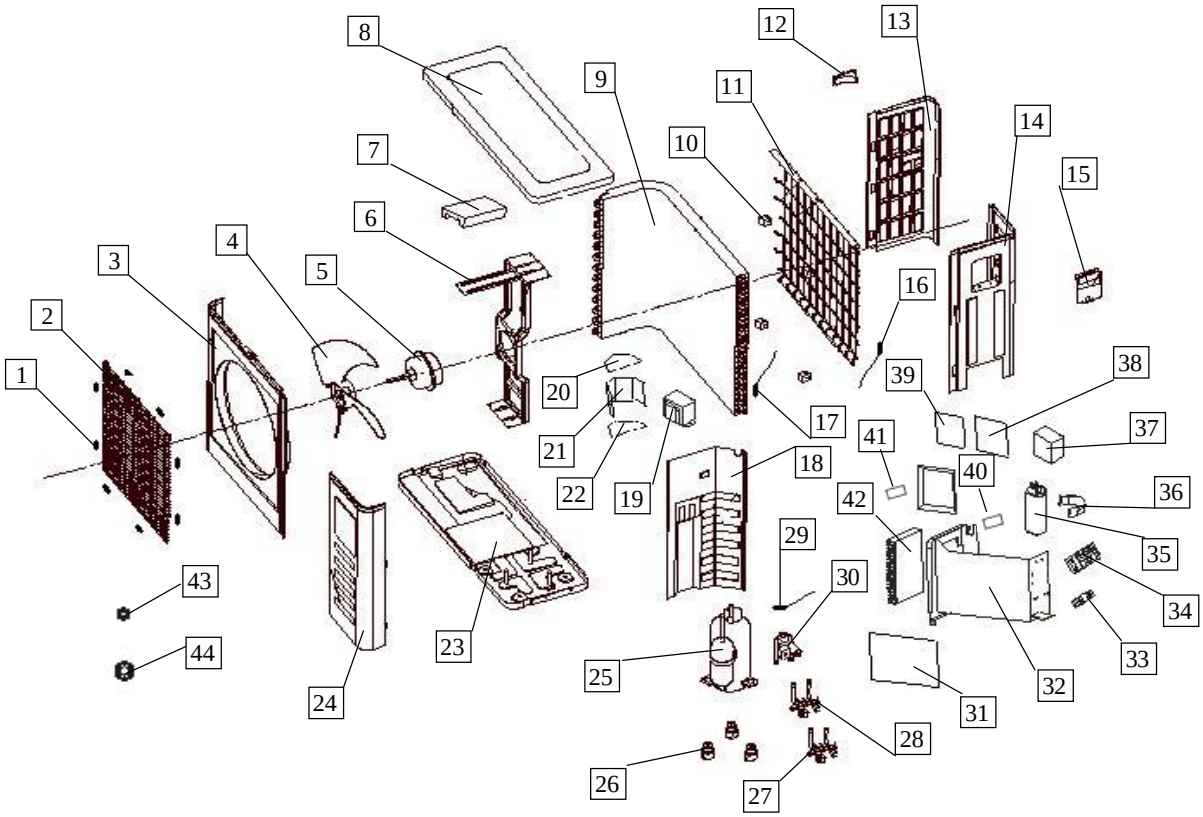

No.	Part Name	Quantity	Sale code	BOM code
1	Clamp for front net	8	10112121801	2113511801
2	Front net	1	10118121801	2124550017
3	Front clapboard	1	10118121802	2124550052
4	Propeller fan	1	10118121804	2114550002
5	Fan motor	1	10830121819	2240041605
6	Holder for fan motor	1	11018121802	2124522802
7	Foam over holder for motor	1	10118121807	2224550001
8	Cover	1	53927121801	2125019025
9	Condenser	1	53927121802	2155019013
10	Underlay for rear net	4	10118121818	2274550001
11	Rear net	1	11018121805	2124550801
12	Small handle	1	10309121802	2113500006
13	Left clapboard	1	10118121815	2124550004
14	Rear right clapboard	1	10830121832	2125019007
15	Big handle	1	10118121817	2114550003
16	Outdoor temp sensor	1	53930121801	2230131063
17	Condenser temp sensor	1	10121121816	2244050002
18	Separating board	1	11018121807	2125023405
19	Reactance	1	10830121833	2230100810
	Reactance	1	10830121834	2230100814
	Reactance	1	10830121835	2230100815
20	Cover for inductance	1	11018121809	2125020303
21	Protecting board for inductance	1	11018121810	2122500306
22	Holder board for inductance	1	11018121811	2122500305
23	Chassis	1	10924121823	2124537502
24	Front right clapboard	1	11018121813	2124550804
25	Compressor	1	53927121803	2140062190
26	Rubber underlay for compressor	3		
27	Liquid pipe valve	1	53618121805	2160074100
	Liquid pipe valve	1	53618121805	2160074100
	Electric Expansive Valve	1	53927121804	2160130019
	Electric Expansive Valve Coil	1	13327113806	2160130010
	Electric Expansive Valve	1	53927121804	2160130019
	Electric Expansive Valve Coil	1	13327113806	2160130010
28	Gas pipe valve	2	53818121805	2160072091
29	Discharge temp sensor	1	53211021801	2249502209
30	4-Ways valve	1	12812121801	2160069011
31	Main control board	1	53918121802	2135029071
32	Installation board for E-parts	1	53927121806	2125019018
33	Washer for wire joint	1	10112121817	2113500004
	Clamp for wiring	1	52308021801	2120010100
34	Wire joint	1	10109111802	2230145014

	Wire joint	1	10718121806	2230145017
35	Compressor capacitor	1	10830121839	2240101007
36	Capacitor clamp	1	10112121814	2120010002
37	Commutating part assembly	1	10830121840	2230050312
38	Power control board	1	10830121841	2135019007
39	Inverter control module assembly	1	10924121816	2131990451
40	Filter	1	10830121842	2230100413
41	Transformer	1	10830121843	2230090044
42	Radiator	1	53918121801	2230190058
43	Copper nut, TLM-A01	2	10909121012	2160032000
44	Copper nut, TLM-C02	2	10909121013	2160032001

12.5 SMF-3E27AI

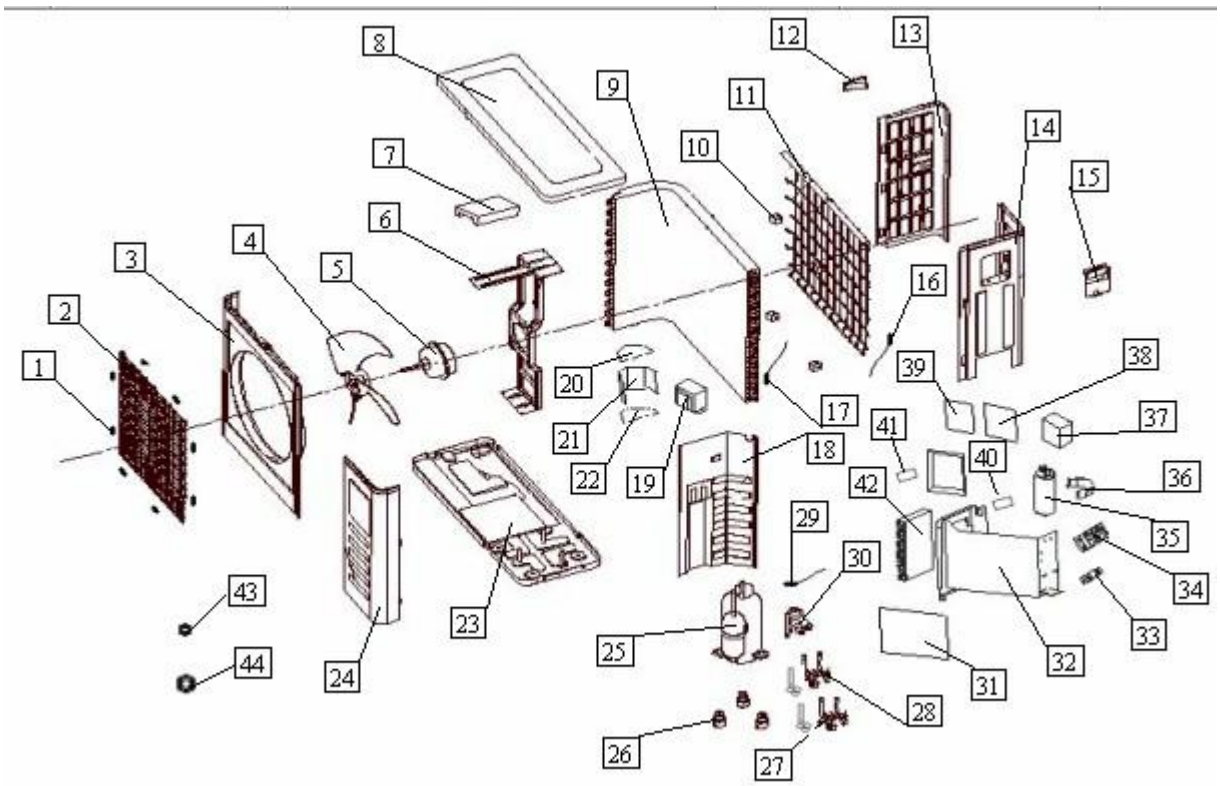

No.	Part Name	Quantity	Sale code	BOM code
1	Clamp for front net	8	10112121801	2113511801
2	Front net	1	10118121801	2124550017
3	Front clapboard	1	10118121802	2124550052
4	Propeller fan	1	10118121804	2114550002
5	Fan motor	1	10830121819	2240041605
6	Holder for fan motor	1	11018121802	2124522802
7	Foam over holder for motor	1	10118121807	2224550001
8	Cover	1	53927121801	2125019025
9	Condenser	1	53927121802	2155019013
10	Underlay for rear net	4	10118121818	2274550001

11	Rear net	1	11018121805	2124550801
12	Small handle	1	10309121802	2113500006
13	Left clapboard	1	10118121815	2124550004
14	Rear right clapboard	1	10830121832	2125019007
15	Big handle	1	10224121808	2114532901
16	Outdoor temp sensor	1	53930121801	2230131063
17	Condenser temp sensor	1	10121121816	2244050002
18	Separating board	1	11018121807	2125023405
19	Reactance	1	10830121833	2230100810
	Reactance	1	10830121834	2230100814
	Reactance	1	10830121835	2230100815
20	Cover for inductance	1	11018121809	2125020303
21	Protecting board for inductance	1	11018121810	2122500306
22	Holder board for inductance	1	11018121811	2122500305
23	Chassis	1	10924121823	2124537502
24	Front right clapboard	1	11018121813	2124550804
25	Compressor	1	53927121803	2140062190
26	Rubber underlay for compressor	3		
27	Liquid pipe valve	1	53618121805	2160074100
	Liquid pipe valve	1	53618121805	2160074100
	Liquid pipe valve	1	53618121805	2160074100
	Electric Expansive Valve	1	53927121804	2160130019
	Electric Expansive Valve Coil	1	13327113806	2160130010
	Electric Expansive Valve	1	53927121804	2160130019
	Electric Expansive Valve Coil	1	13327113806	2160130010
	Electric Expansive Valve	1	53927121804	2160130019
	Electric Expansive Valve Coil	1	13327113806	2160130010
28	Gas pipe valve	3	53818121805	2160072091
29	Discharge temp sensor	1	53211021801	2249502209
30	4-Ways valve	1	12812121801	2160069011
31	Main control board	1	53927121805	2135019010
32	Installation board for E-parts	1	53927121806	2125019018
33	Washer for wire joint	1	10112121817	2113500004
	Clamp for wiring	1	52308021801	2120010100
34	Wire joint	1	10109111802	2230145014
	Wire joint	1	10718121806	2230145017
35	Compressor capacitor	1	10830121839	2240101007
36	Capacitor clamp	1	10112121814	2120010002
37	Commutating part assembly	1	10830121840	2230050312
38	Power control board	1	10830121841	2135019007
39	Inverter control module assembly	1	10924121816	2131990451
40	Filter	1	10830121842	2230100413
41	Transformer	1	10830121843	2230090044

42	Radiator	1	53918121801	2230190058
43	Copper nut, TLM-A01	3	10909121012	2160032000
44	Copper nut, TLM-C02	3	10909121013	2160032001

Annex 1

Characteristic of temp. sensor

Temp.℃	Resistance KΩ		Temp.℃	Resistance KΩ		Temp.℃	Resistance KΩ
-10	62.2756		17	14.6181		44	4.3874
-9	58.7079		18	13.918		45	4.2126
-8	56.3694		19	13.2631		46	4.0459
-7	52.2438		20	12.6431		47	3.8867
-6	49.3161		21	12.0561		48	3.7348
-5	46.5725		22	11.5		49	3.5896
-4	44		23	10.9731		50	3.451
-3	41.5878		24	10.4736		51	3.3185
-2	39.8239		25	10		52	3.1918
-1	37.1988		26	9.5507		53	3.0707
0	35.2024		27	9.1245		54	2.959
1	33.3269		28	8.7198		55	2.8442
2	31.5635		29	8.3357		56	2.7382
3	29.9058		30	7.9708		57	2.6368
4	28.3459		31	7.6241		58	2.5397
5	26.8778		32	7.2946		59	2.4468
6	25.4954		33	6.9814		60	2.3577
7	24.1932		34	6.6835		61	2.2725
8	22.5662		35	6.4002		62	2.1907
9	21.8094		36	6.1306		63	2.1124
10	20.7184		37	5.8736		64	2.0373
11	19.6891		38	5.6296		65	1.9653
12	18.7177		39	5.3969		66	1.8963
13	17.8005		40	5.1752		67	1.830
14	16.9341		41	4.9639		68	1.7665
15	16.1156		42	4.7625		69	1.7055
16	15.3418		43	4.5705		70	1.6469

Annex 2

1. Reference voltage data:

   a) Rectifier: Input: 220-230V(AC), output: 310V(DC)

   Normally In power board:

   P3 and P4: 310V(DC)

   P5 and P6: 310V(DC)

   b) Inverter module: U, V, W 3ph.

	Result
U-V	60-150V(AC)
U-W	60-150V(AC)
V-W	60-150V(AC)
P-N	DC 310V

   c) Photo-couple PC817, PC851: Control side <+5V, AC side: < 24V(AC)

   d) S terminal and N: changeable from 0-24V

2. Check the Diode Bridge component (In wiring diagram, rectifier)

Remark: If this part is abnormal, the LED will not light.

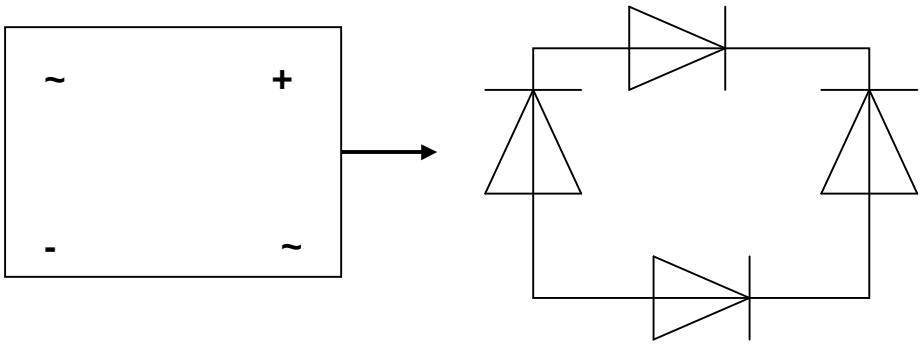

Multi-meter		Result	
		Forward Resistance	Backward Resistance
+	_	Infinite	Infinite
~	+	~500 ohm	Infinite
~			
-	~	~500 ohm	Infinite
	~		