Midea

make yourself at home

Product Catalogue 2025

For residential and light commercial applications

Your Smart AC solution

www.midea.com

Vision, Mission, Value

Carried on traditional culture and embrace future

Bring great innovations to life

Integrate with the world, to inspire your future

Embrace what's next

Aiming High Customer first
Transformation Tolerance and
Innovation partnership
Dedication and commitment

Sustainable Development Goals

Midea Group takes **"the advanced nature of corporate governance, the advancement of value concepts, and the spiritual growth of management"** as the three major cornerstones of sustainable development. Starting from "Protect the Blue Planet, Build a Harmonious Community, Practice 'Bring Great Innovations to Life', and jointly Create the Prosperous Ecology", we are building a green, safe, and stable supply chain for the world.

Aiming to provide global users with green, intelligent, and easy-to-use products and services, Midea Group strives to promote the maintenance of a green, ecological, and sustainable community environment, and to work together with global users for building a green and beautiful home.

01 Protect the Blue Planet

The Earth is our shared home, We may follow the vision of a community with a shared future for mankind and pitch in to tackle climate and other environmental challenges and protect the blue planet.

02 Build a Harmonious Community

Committed to a people centered approach, we strive to build a harmonious community that is diverse, fair and inclusive, so that all of our employees can feel at home.

03 Practice "Bring Great Innovations to Life"

Adhering to the strategy of Technology Leadership, we practice the vision of "Bring Great Innovations to Life". And we are devoted to the society through innovative products and services, creating a better life and future together.

04 Jointly Create the Prosperous Ecology

We expand the radius of green and low carbon development, and work together with our partners towards a greener, more efficient, smarter and better industrial future.

7 Reasons why Midea LCAC is unique in the market

1 Complete product portfolios

- Wide variety of indoor units, support complex applications for shop, school, hotel , restaurants and home environments.

2 Excellent energy efficiency

- Variable Refrigerant Temperature for optimum seasonal efficiency
- New upgrade of system hardware, better energy saving

3 Lasting reliability

- Refrigerant cooled PCB
- Most extensive testing before new units leave the factory
- Widest support network and after sales service
- All spare parts available in Europe

4 Easy installation design

- Real-time constant air volume technology: automatically adjust according to pipeline resistance, output constant air volume, reduce installation and debugging time
- Fashionable design and streamline appearance, suitable for different room styles.

5 Leading intelligent control

- Intelligent control is not only convenient for users to operate air conditioners, but also capable of providing assistance to help you develop good air conditioner usage habits. Whether it is the remote control or the BMS system, Midea has suitable control products available for you to choose from, providing personalized services to meet your various usage demands.

6 Classic aesthetic design

- Our indoor units appearance are designed with minimalistic style in mind, so they won't detract from the aesthetics of your home. The sleek, modern design is sure to complement any interior décor.

7 Extreme comfort experience

- Low sound indoor and outdoor units
- Variable Refrigerant Temperature preventing cold draughts
- Evaporator self-cleaning function, to provide indoor cleaner air, reduce manual cleaning costs
- Fresh air intake integrated in indoor unit

European Energy Efficiency Standards:

Midea's products strictly adhere to the latest Energy Efficiency Standards, utilizing advanced technology to maximize energy utilization efficiency. **Every kilowatt-hour is meticulously calculated to save you energy costs while reducing carbon emissions, contributing to a greener future.** Choosing us means not only opting for high quality but also embracing a commitment to environmental responsibility.

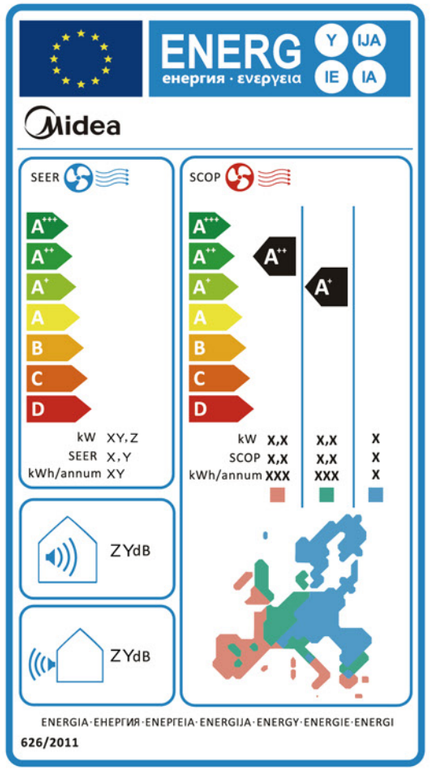

	SEER (Cooling Mode)	SCOP (Heating Mode)
A+++	SEER≥8.50	SCOP≥5.10
A++	6.10≤SEER<8.50	4.60≤SCOP<5.10
A+	5.60≤SEER<6.10	4.00≤SCOP<4.60
A	5.10≤SEER<5.60	3.40≤SCOP<4.00
B	4.60≤SEER<5.10	3.10≤SCOP<3.40
C	4.10≤SEER<4.60	2.80≤SCOP<3.10
D	3.60≤SEER<4.10	2.50≤SCOP<2.80
E	3.10≤SEER<3.60	2.20≤SCOP<2.50
F	2.60≤SEER<3.10	1.90≤SCOP<2.20
G	SEER<2.60	SCOP<1.90

EUROVENT CERTIFIED PERFORMANCE
www.eurovent-certification.com

The products have achieved EUROVENT certification, ensuring rigorous third-party testing and compliance with European HVAC standards for energy efficiency, performance, and environmental protection, offering reliable and efficient operation.

Product overview

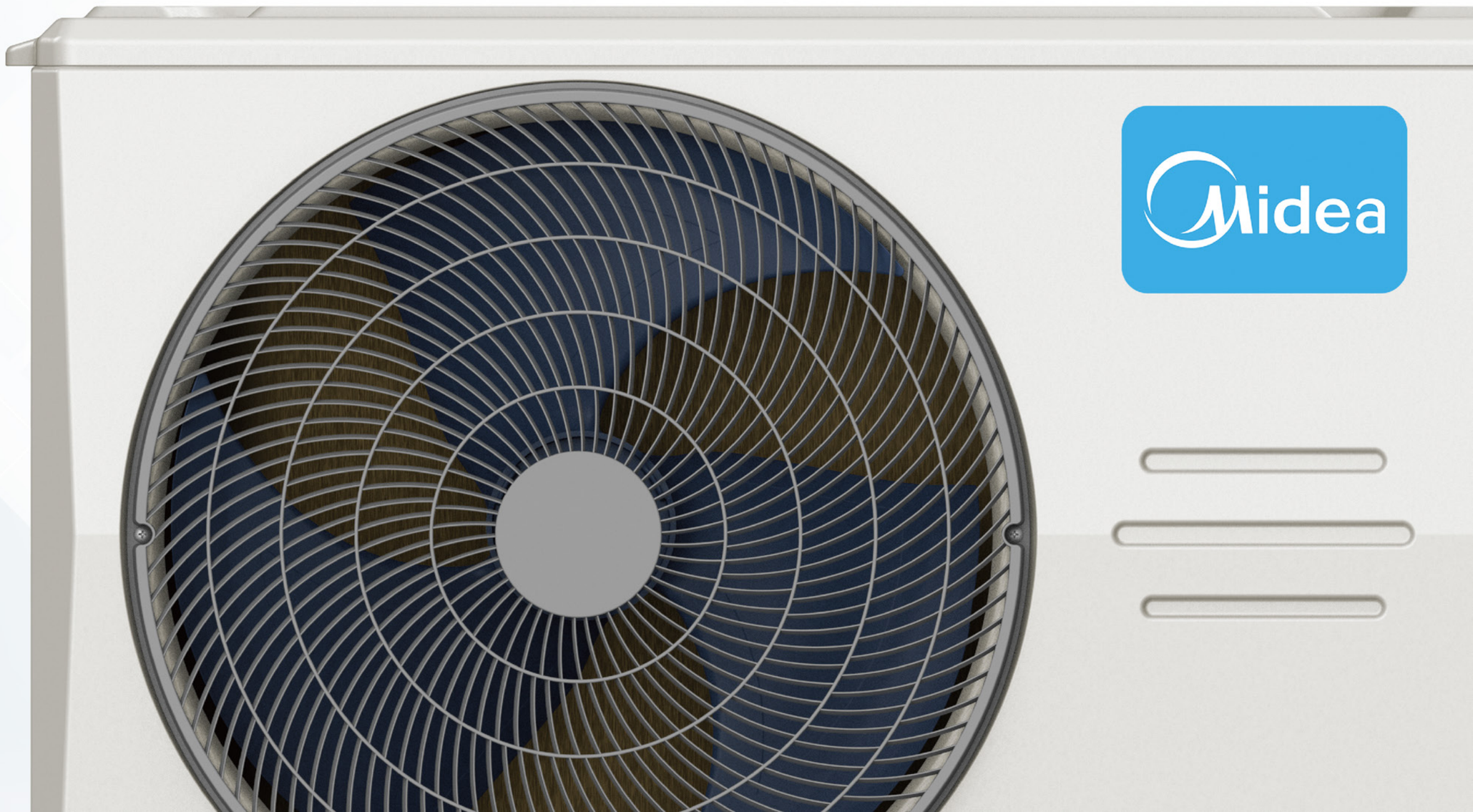

01

MULTI SPLIT SYSTEM

Product overview MULTI SPLIT SYSTEM					Tank Volume class		Capacity class	
Type	Product name	Appearance	Page	Features	100L	190L	18K	27K
CirQHP Heat Recovery	M3OA		15	• High efficiency and energy saving, waste heat recovery, zero electricity cost for hot water*. • Space-saving, freeing up indoor and outdoor installation space. • Rich variety of indoor units, with a wide range of series, cooling capacities, and choices, SEER up to A+++. • Easy to install and maintain, suitable for installation in limited space.	●		●	
	M4OA		15		●	●		●
	PBSX		15	• Microchannel heat transfer technology increases the contact surface between the heat exchanger and the water tank, enhancing heat exchange efficiency with a porous parallel flow design. • The water tank uses a high-density polyurethane insulation layer, ensuring long-lasting heat preservation. • Bottom connection design with a height more suitable for humans, making installation and after-sales maintenance easier and more efficient, saving time and effort . • More precise water temperature control: Dual temperature sensor design and more balanced water temperature.	●			
	PLSX		15	• Compact design with wall-mounted installation, can be installed inside a cabinet to save indoor space. • Microchannel heat transfer technology increases the contact surface between the heat exchanger and the water tank, enhancing heat exchange efficiency with a porous parallel flow design. • More precise water temperature control: Dual temperature sensor design and more balanced water temperature.		●		

Note :To qualify for free hot water heating, the heat recovery conditions must be met. The right of interpretation belongs to the manufacturer.

Product overview MULTI SPLIT SYSTEM					Capacity class							
Type	Product name	Appearance	Page	Features	14K	18K	21K	24K	27K	28K	36K	42K
High-Efficiency Multi-Split	M2OF		21	• Individual Control, provide individual control for each indoor unit, brings desired comfort and saves energy, since you can heat or cool only those rooms you are using versus the entire house. • Power Consumption Detection and Query: The power consumption of each indoor unit in a multi-split system can be individually detected, with energy usage measured per indoor unit. • Capability Detection and Query: The real-time cooling/heating capacity of each indoor unit can be individually detected. • The perfect combination of high-efficiency compressor and high-performance condenser		●						
	M3OC		21						●			
Standard Multi Split System	M2OH/M2OE		24		●	●						
	M3OA		24			●						
	M3OG/M3OB		24	• Wide Selection of Indoor Units, provide a wide selection of indoor unit capacities and styles to suit a variety of room sizes and designs. • Space Saving and Low Noise , connect to several indoor units to a single outdoor unit, save installation space and reduce outdoor noise. • Lower Energy Consumption, compared with multiple outdoor units running at the same time, multisystem can be an option to improve heat exchange and energy efficiency, reduce power consumption. • Individual Control, provide individual control for each indoor unit, brings desired comfort and saves energy, since you can heat or cool only those rooms you are using versus the entire house.			●		●			
	M4OA		24					●				
	M4OE/M4OB		24							●	●	
	M5OE		24									●
Entry Multi Split System	M2OI/M2OG		/	• Space Saving and Low Noise: Connect to several indoor units to a single outdoor unit, save installation space and reduce outdoor noise. • No Ductwork: Able to cool or heat multiple zones without ductwork. • Small and portable, convenient for transportation. • Individual Control: Provide individual control for each indoor unit, brings desired comfort and saves energy, since you can heat or cool only those rooms you are using versus the entire house.	●	●						
	M3OC		/						●			

Note: ● Indicates having 7K indoor units

Type	Combination Table	Outdoor Model	BREEZELESS	Oasis Plus	ALL EASY PRO	BREEZELESS E	Solstice	EF4.0	XTREME	Duct	Round Flow Compact Cassette	Round Flow Cassette	One-way Cassette	Ceiling & Floor	Console
			MSFA	MSOP	MSEP	MSCB	MSEZ	MSEF	MSAG						
			9K12K	9K12K18K	9K12K18K24K	7K9K12K18K24K	9K/12K/18K/24K	7K/9K/12K/18K/24K	7K/9K/12K/18K/24K	7K/9K/12K/18K/24K	7K/9K/12K/18K	24K	9K/12K/18K/24K	18K/24K	9K/12K/18K
Entry Multi Split System	14K One-to-Two (7K×2)	M2OI-14HFN8-Q						●	●						
	18K One-to-Two (9K×2)	M2OG-18HFN8-Q						●	●						
	27K One-to-Three (9K×3)	M3OC-27HFN8-Q						●	●						
Standard Multi-Split System	14K One-to-Two (7K×2)	M2OH-14HFN8-Q	●		●	●	●	●	●	●	●	●	●		●
	18K One-to-Two (9K×2)	M2OE-18HFN8-Q	●		●	●	●	●	●	●	●	●	●	●	●
	18K One-to-Three (9K×3)	M3OA-18HFN8-Q				●	●	●	●	●	●	●		●	●
	21K One-to-Three (7K×3)	M3OG-21HFN8-Q	●		●	●	●	●	●	●	●	●	●	●	●
	27K One-to-Three (9K×3)	M3OB-27HFN8-Q	●		●	●	●	●	●	●	●	●	●	●	●
	24K One-to-Four (7K/9K×4)	M4OA-24HFN8-Q				●	●	●	●	●	●	●	●	●	●
	28K One-to-Four (7K×4)	M4OE-28HFN8-Q	●			●	●	●	●	●	●	●	●	●	●
	36K One-to-Four (9K×4)	M4OB-36HFN8-Q	●		●	●	●	●	●	●	●	●	●	●	●
	42K One-to-Five (9K×5)	M5OE-42HFN8-Q	●		●	●	●	●	●	●	●	●	●	●	●
High-Efficiency Multi-Split System	18K One-to-Two (9K×2)	M2OF-18HFN8-Q		●	●		●	●	●	●	●	●		●	●
	27K One-to-Three (9K×3)	M3OC-27HFN8-Q		●	●		●	●	●	●	●	●		●	●
CirQHP Heat Recovery System	27K(3+1) Heat Recovery	M4OA-27HFN8-Q(HRU)		●	●	●	●	●	●	●	●	●		●	●
	18K(2+1) Heat Recovery	M3OA-18HFN8-Q(HRU)		●	●	●	●	●	●	●	●	●		●	●

Note : 1 Heat recovery multi-split 18k (2+1), where 2 is the number of compatible indoor units and 1 is the number of compatible refrigerant tanks; 27k (3+1), where 3 is the number of compatible indoor units and 1 is the number of compatible refrigerant tanks。
2 When pairing indoor units, only one Ceiling & Floor series indoor unit can be selected, while the others can be chosen from other compatible indoor unit series.
3 The M3OA-18HFN8-Q outdoor unit does not support pairing with three Console series indoor units simultaneously.

Product overview MULTI SPLIT SYSTEM					Capacity class				
Type	Product name	Appearance	Page	Features	7K	9K	12K	18K	24K
Wall-mounted	MSFA		26	• TwinFlap™ with Mini-holes offers multiple wind modes and a breezeless cooling experience by deflecting and softening airflow. • The Mini-hole Matrix with 7,928 micro-holes softens airflow into tiny strings, providing a barely noticeable, cool breeze. • All-New Rapid Cooling Cool your space in the Boost mode thanks to the high-speed fan and powerful compressor. • The S-wing outlets provide a 360° cooling experience, delivering breezeless coolness to every corner.		●	●		
	MSOP		27	• Hidden Millimeter-wave Radar, Midea uses hidden sensors to detect human movements and adjust AC operation while protecting user privacy. • Strong Airflow, Air outlet design is 110mm wide, 25% bigger than Midea conventional AC. • Comfort Humidity, Smart sensors adjust room humidity to a comfortable range (30%-90%) via smartphone control.		●	●	●	
	MSEP		28	• Easy to Install: 176mm large piping space and front-placed E-BOX ensure fast and convenient wiring. • Easy to Cool with More Comfort. Quickly cools from corner to corner. • Easy to maintain.		●	●	●	●
	MSCB		29	• Breezeless E uses Cool Flash Plus and Heat Flash technology for instant cooling and heating. • 3 Adjustable Breezeless Modes, Softly Cool You Down Without Noticeable Breeze.	●	●	●	●	●
	MSEZ		30	• Easy to Install. • Air Magic+:Built-in negative ion generator eliminates up to 99.9% of viruses and bacteria including Staphylococcus aureus, Escherichia coli, H1N1, Enterovirus 71*.		●	●	●	●
	MSEF		31	• 180° Rotating Wind Deflector: Unintentionally even out temperature, unanticipated delight in comfort. • i-Sleep: Adaptive 3D sleep curve.	●	●	●	●	●
	MSAG		32	• Healthy Filters, Dual Filtration system removes harmful substances in two steps, delivering clean and fresh air. • App-based Remote Control.	●	●	●	●	●
Duct	MTJ		/	• Slimmer and lighter, meet various installations in narrow ceilings. • Real-time Constant Air Volume. • Static Pressure Increase, the maximum ESP is increased to 160Pa for 18K24K.	●	●	●	●	●
Round Flow Cassette	MCD1		/	• 360 round flow. • Individual Vane control (Optional). • Power Breezeless Technology ,exclusive power breezeless wind deflector(Optional). • Built in water pump.					●
Round Flow Compact Cassette	MCA4		/	• 360 round flow. • Individual Vane control (Optional). • Power Breezeless Technology ,exclusive power breezeless wind deflector(Optional). • Built in water pump.	●	●	●	●	
One-way Cassette	MCUTA		/	• Ultra-thin design: Body height 130mm only, the ceiling can be as low as 170mm. • Hidden installation seamlessly integrates with interior decor, enhancing overall aesthetics. • Wide-angle sweeping: The horizontal air guide can sweep up to 85°, and the vertical air guide can sweep up to 120°, making wind direction control more flexible. • Standard built-in DC water pump with a lift height of up to 1200mm.		●	●	●	●
Ceiling & Floor	MUE		/	• Supports left and right sweeping angles of 120°. • Supports optional built-in water pump. • Can easily be mounted in corners and narrow spaces, as it only needs 30mm lateral service space. • Even rooms with ceilings up to 3.8m can be heated up or cooled down very easily without capacity loss. • Can easily be installed in both new and refurbishment projects.				●	●
Console	MFA2		/	• Can easily be installed in both new and refurbishment projects. • Dual air outlets satisfy both cooling and heating needs in different seasons and allows a quick comfort of the room.		●	●	●	

● standard ○ optional

	MULTI SPLIT SYSTEM		Wall-mounted							Concealed ceiling units	Ceiling mounted cassette units		Ceiling mounted cassette units	Ceiling & Floor units	Floor standing units
			BREEZELESS	Oasis Plus	ALL EASY PRO	BREEZELESS E	Solstice	EF4.0	XTREME	Duct	Round Flow Cassette	Round Flow Compact Cassette	One-way Cassette	Ceiling & Floor	Console
			MSFA	MSOP	MSEP	MSCB	MSEZ	MSEF	MSAG	MTJ	MCD1	MCA4	MCUTA	MUE	MFA2
														
Comfort	Breezeless Technology	Through the special design of countless Mini-holes and Hourglass Design, cold air is dispersed into gentle airflow, avoiding the discomfort caused by direct blowing。	●			●						○	○	○	
Comfort	ThermoStatic Technology	Providing a stable environment through precise temperature control.	●			●			●						
Comfort	Fresh air	At the same time of cooling and heating, the room is ventilated to make the indoor air fresher and healthier.								●	●	●			
Comfort	Auto defrosting	The air conditioner automatically enters the defrosting mode to remove frosting from the outdoor unit.	●	●	●	●	●	●	●	●	●	●	●	●	●
Comfort	Anti-cold air function	Prevent cold wind from blowing out when heating in winter, improve user comfort.	●	●	●	●	●	●	●	●	●	●	●	●	●
Comfort	Sleep mode	Sleep mode reduces the difference between the ambient temperature and the set temperature, saving electricity and ensuring a restful and comfortable sleep.	●	●	●	●	●	●	●						
Air flow	360° air flow panel	The design avoids airflow dead corners and increases airflow coverage in the room.									●	●			
Air flow	Wide-angle air flow	The wide-angle wind is more average than the ordinary wind, and the wind is stronger, and the indoor air can be mixed and evenly dispersed faster.									●	●			
Air flow	Fan speed steps	Allows to select up to the given number of fan speed.	●	●	●	●	●	●	●	●	●	●	●	●	●
Air flow	Real-time constant air volume	Automatic adjustment according to pipeline resistance, output constant air volume, easy installation, reduce installation and debugging time.								●					
Air Treatment	Dry mode	Allows humidity levels to be reduced without variations in room temperature.	●	●	●	●	●	●	●	●	●	●	●	●	●
Air Treatment	Air filter	Removes airborne dust particles to ensure a steady supply of clean air.	●	●	●	●	●	●	●	●	●	●	●	●	●
Intelligent control	Smart home app	Control your indoor climate from any location via smartphone or tablet.	●	●	●	●	●	●	●	●	●	●	●	●	●
Intelligent control	Timer	Can be set to start heating or cooling anytime on a daily or weekly basis.	●	●	●	●	●	●	●	●	●	●	●	●	●
Intelligent control	Infrared remote control	Starts, stops and regulates the air conditioner from a distance.	●	●	●	●	●	●	●	○	●	●	●	●	●
Intelligent control	WIFI	The air conditioner is connected to a wireless network and can be remotely controlled by mobile devices such as mobile phones.	○	○	○	○	○	○	○	○	○	○	○	○	○
Intelligent control	Wired remote control	Starts, stops and regulates the air conditioner.	○	○	○	○	○	○	○	●	○	○	○	○	○
Intelligent control	Centralised control	Starts, stops and regulates several air conditioners from one central point.	○	○	○	○	○	○	○	○	○	○	○	○	○
Reliablity	Self-diagnosis& auto-protection	Simplifies maintenance by indicating system faults or operating anomalies.	●	●	●	●	●	●	●	●	●	●	●	●	●
We care	Home leave operation	Maintains the indoor temperature at your specified comfort level during absence,thus saving energy.							●	●	●	●	●	●	●
We care	Fan only	The unit can be used as fan, blowing air without heating or cooling.	●	●	●	●	●	●	●	●	●	●	●	●	●
Other functions	Build-in drain pump	Facilitates condensation draining from the indoor unit.								○	●	●	●	○	
Other functions	Power down memory	After the air conditioner is powered off and then powered on, it remembers the working state before the power failure and automatically returns to the working mode.	●	●	●	●	●	●	●	●	●	●	●	●	●
Other functions	Rotation: intelligent dusting switch	By turning the fan in the opposite direction, the dust that accumulates inside the external machine is blown out and negative pressure is formed inside the fan, thus playing a cleaning role.	○	○	○	○	○	○	○	○	○	○	○	○	○

CirQHP Heat Recovery

Feature

Appearance

Multiple Control Methods

Midea Multi Split System- CirQHP Heat Recovery

High Efficiency and Energy Saving

Midea multi splits system provides you fast cooling and heating speed and independent room control, allowing free control respectively with less energy cost. With the application of heat recovery technology, the system recovers 2.5kW*1 of waste heat for DHW heating for every 1kW of electricity consumed, the maximum heat recovery efficiency can reach up to 100%*2.

Optimal Comfort

The multi split system can be connected to a variety of indoor units, with comfortable temperatures, breezeless technology, humidity control and fresh air in every room. Use whichever types of indoor units are most suitable for maximum comfort and individual space requirements.

Flexibility and Easy Installation

A single outdoor unit can connect to a maximum of **3** indoor units plus a **domestic water tank (with heat recovery technology)**. In summer, apart from heating and cooling, the heat recovered by the system is enough to provide for all the water heating required.
Combine the outdoor unit with whichever shape or profile of indoor unit is most suitable for your aesthetic or room constraints.

Environment Protection

With only one outdoor unit you can cover all of your cooling and heating needs, thus reducing energy and material waste during production, transport and installation.

Smart Control

With the **SmartHome** app, your Midea multi split system can be connected and seamlessly controlled with your smart phone, providing a one-stop solution.

*1. Data tested by Midea's internal laboratory, under the condition of an OD temperature of 35°C /24°C and an ID temperature of 27°C/19°C, using three 2.6kW capacity Breezeless E indoor units and a 190L water tank, consuming 1kW·h of electricity can produce 3.5kW of air conditioner cooling capacity and 2.5kW of DHW heating capacity, with the hot water temperature rising from 20°C to 30°C. Actual performance may vary depending on installation and environmental condition.
*2. According to the data from Midea's internal laboratory, in the test of heating a 200L water tank from 20°C to 45°C, the maximum heat recovery efficiency of heat recovery technology can reach 100%. This means that the waste heat from the air conditioner is fully recovered and used to heat the water tank.

CirQHP Heat Recovery Portfolio

Multi Split System with Heat Recovery Technology

Multi Split + Domestic Hot Water + Heat Recovery Technology

A single outdoor unit can be connected to a maximum of 3 indoor units and a domestic hot water tank (with heat recovery technology). This system will provide heating, cooling and free domestic hot water in summer.

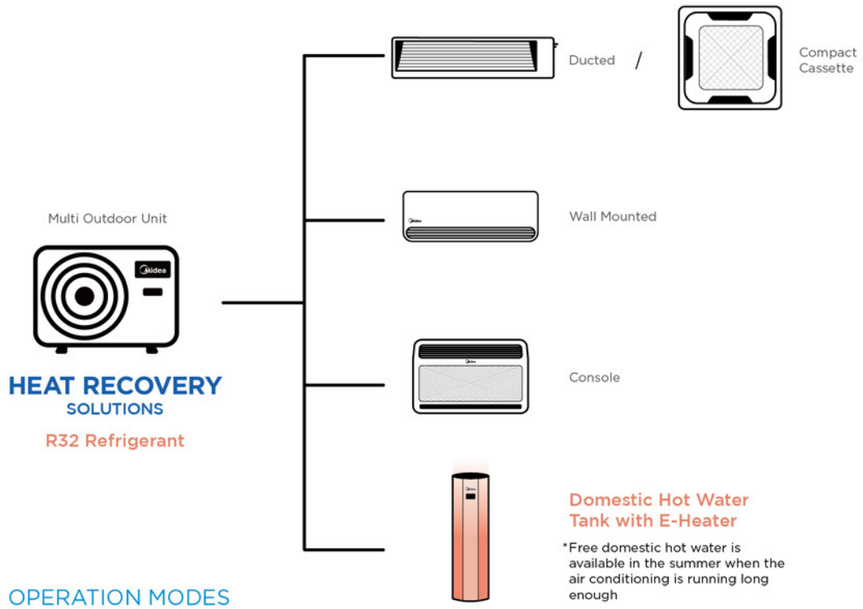

OPERATION MODES

- ATA Cooling
- DHW Heating Only (Heat Pump)
- ATA Cooling + Domestic Hot Water Heating (Heat Recovery)
- ATA Heating
- ATA Heating + Domestic Hot Water Heating (E-heater)

Midea Multi Split System - CirQHP Heat Recovery

Heat Recovery

Recycled heat from the outdoor unit is transferred to the tank for free domestic hot water

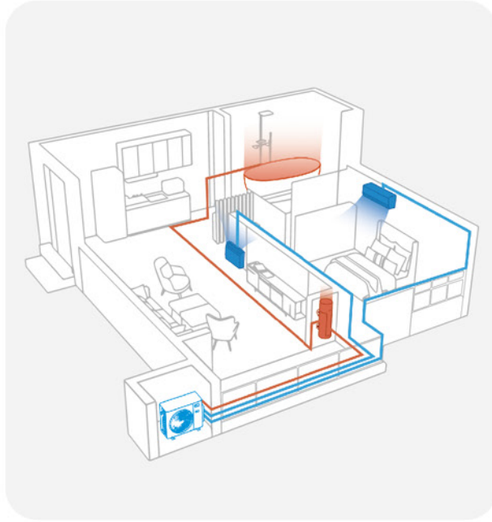

CirQHP Heat Recovery

18K HR ODU+IDU

Indoor			MSCB1BU-09HRFN8-QRD1GW*2	MSAGAU-09HRFNX-QRD0GW *2	MFA2U-09HRFNX-QRD0W(GA)*2	MTJ-09HWFNX-QRD1W(GA)*2	MTJ-18HWFNX-QRD1W(GA) *1
Outdoor			M3OA-18HFN8-Q(HRU)	M3OA-18HFN8-Q(HRU)	M3OA-18HFN8-Q(HRU)	M3OA-18HFN8-Q(HRU)	M3OA-18HFN8-Q(HRU)
Seasonal Cooling	Pdesignc	kW	5.3	5.3	5.3	5.3	5.0
	SEER	W/W	7.2	6.9	7.6	6.3	6.1
	Energy Efficiency Class		A++	A++	A++	A++	A++
Heating (Average)	Pdesignh	kW	4.7	4.5	4.7	4.6	4.6
	SCOP	W/W	4.3	4.1	4.6	4.2	3.8
	Energy Efficiency Class		A+	A+	A++	A+	A
Heating (Warmer)	Pdesignh	kW	4.9	5.0	4.8	5.2	4.8
	SCOP	W/W	5.6	5.2	5.6	5.2	4.8
	Energy Efficiency Class		A+++	A+++	A+++	A+++	A++
Power supply		V,Ph,Hz	220-240V,1Ph,50Hz	220-240V,1Ph,50Hz	220-240V,1Ph,50Hz	220-240V,1Ph,50Hz	220-240V,1Ph,50Hz
Cooling Capacity	Rated(Min-Max)	kW	5.3(1.6-6.2)	5.3(1.6-6.1)	5.3(1.6-6.3)	5.3(1.6-6.7)	5.0(1.5-5.2)
Heating Capacity	Rated(Min-Max)	kW	5.3(1.6-6.1)	5.3(1.6-5.6)	5.3(1.6-6.3)	5.3(1.6-6.6)	5.0(1.5-5.2)
Outdoor air flow		m^3/h	3,000	3,000	3,000	3,000	3,000
Outdoor sound pressure level		dB(A)	59	58	58	57	59
Outdoor sound power level		dB(A)	64	64	64	64	64
Outdoor unit	Dimension(W×D×H)	mm	890×342×673	890×342×673	890×342×673	890×342×673	890×342×673
	Packing(W×D×H)	mm	1030×438×750	1030×438×750	1030×438×750	1030×438×750	1030×438×750
	Net/Gross weight	kg	46.6/50.3	46.6/50.3	46.6/50.3	46.6/50.3	46.6/50.3
Refrigerant	Type		R32	R32	R32	R32	R32
	GWP		675	675	675	675	675
	Charged quantity	kg	1.5	1.5	1.5	1.5	1.5
Design pressure		MPa	4.3 / 1.7	4.3 / 1.7	4.3 / 1.7	4.3 / 1.7	4.3 / 1.7
Refrigerant piping	Liquid side/ Gas side	mm(inch)	3×6.35mm(3×1/4in)/ 3×9.52mm(3×3/8in)	3×6.35mm(3×1/4in)/ 3×9.52mm(3×3/8in)	3×6.35mm(3×1/4in)/ 3×9.52mm(3×3/8in)	3×6.35mm(3×1/4in)/ 3×9.52mm(3×3/8in)	3×6.35mm(3×1/4in)/ 3×9.52mm(3×3/8in)
	Max. length for all rooms	m	60(20m for DHW)	60(20m for DHW)	60(20m for DHW)	60(20m for DHW)	40(20m for DHW)
	Max. length for one indoor unit	m	30	30	30	30	25
	Max. IU-OU height difference	m	15	15	15	15	15
	Max. IU-IU height difference	m	10	10	10	10	10
Qty'per 20' /40' /40'HQ		Outdoor unit	84/171/171	84/171/171	84/171/171	84/171/171	84/171/171

27K HR ODU+IDU

Indoor			MSCB1BU-09HRFN8-QRD1GW*3	MSAGAU-09HRFNX-QRD0GW*3	MSAGBU-09HRFN8-QRD1GW(GA)*3	MSEPBU-09HRFN8-QRD6GW*3
Outdoor			M4OA-27HFN8-Q（HRU）	M4OA-27HFN8-Q（HRU）	M4OA-27HFN8-Q（HRU）	M4OA-27HFN8-Q（HRU）
Seasonal Cooling	Pdesignc	kW	7.9	7.9	7.9	7.9
	SEER	W/W	7.2	6.3	7.0	7.5
			A++	A++	A++	A++
Heating (Average)	Pdesignh	kW	6.7	6.2	6.5	6.2
	SCOP	W/W	4.6	4.1	4.6	4.1
	Energy Efficiency Class		A++	A+	A++	A+
Heating (Warmer)	Pdesignh	kW	6.8	6.4	7.6	6.4
	SCOP	W/W	5.1	5.1	5.1	5.1
			A+++	A+++	A+++	A+++
Power supply		V,Ph,Hz	220-240V,1Ph，50Hz	220-240V,1Ph，50Hz	220-240V,1Ph，50Hz	220-240V,1Ph，50Hz
Cooling Capacity	Rated(Min-Max)	kW	2.3（0.2-2.8）	2.5(0.2-2.9)	2.3(0.3-2.8)	2.3(0.2-2.8)
Heating Capacity	Rated(Min-Max)	kW	2.2（0.3-3.0）	2.2(0.4-3.0)	2.2(0.3-3.0)	2.2(0.3-3.0)
Outdoor air flow		m^3/h	4000	4000	4000	4000
Outdoor sound pressure level		dB(A)	61	61	61	61
Outdoor sound power level		dB(A)	69	69	69	69
Outdoor unit	Dimension(W×D×H)	mm	946×410×810	946×410×810	946×410×810	946×410×810
	Packing（W×D×H）	mm	1090×500×885	1090×500×885	1090×500×885	1090×500×885
	Net/Gross weight	kg	64.3/68.6	64.3/68.6	64.3/68.6	64.3/68.6
Refrigerant	Type		R32	R32	R32	R32
	GWP		675	675	675	675
	Charged quantity	kg	1.8	1.8	1.8	1.8
Design pressure		MPa	4.3/1.7	4.3/1.7	4.3/1.7	4.3/1.7
Refrigerant piping	Liquid side/Gas side	mm(inch)	4×6.35mm(4×1/4in)/3×9.52mm+ 1×12.7mm(3×3/8in+1×1/2in)	4×6.35mm(4×1/4in)/3×9.52mm+ 1×12.7mm(3×3/8in+1×1/2in)	4×6.35mm(4×1/4in)/3×9.52mm+ 1×12.7mm(3×3/8in+1×1/2in)	4×6.35mm(4×1/4in)/3×9.52mm+ 1×12.7mm(3×3/8in+1×1/2in)
	Max. length for all rooms	m	80(20m for DHW)	80(20m for DHW)	80(20m for DHW)	80(20m for DHW)
	Max. length for one indoor unit	m	35	35	35	35
	Max. IU-OU height difference	m	15	15	15	15
	Max. IU-IU height difference	m	10	10	10	10
Qty'per 20' /40' /40'HQ		Outdoor unit	44/96/138	44/96/138	44/96/138	44/96/138

Indoor			MFA2U-09HRFNX-QRD0W(GA) * 3	MCA4U-09HRFNX-QRD1W(GA) * 3	MTJ-09HWFNX-QRD1W(GA)*3	MTJ-24HWFNX-QRD1W(GA)
Outdoor			M4OA-27HFN8-Q（HRU）	M4OA-27HFN8-Q（HRU）	M4OA-27HFN8-Q（HRU）	M4OA-27HFN8-Q（HRU）
Seasonal Cooling	Pdesignc	kW	7.9	7.9	7.9	7.1
	SEER	W/W	8.5	6.3	6.3	6.3
			A+++	A++	A++	A++
Heating (Average)	Pdesignh	kW	6.5	6	6.1	5.7
	SCOP	W/W	4.6	4.6	4.1	4.1
	Energy Efficiency Class		A++	A++	A+	A+
Heating (Warmer)	Pdesignh	kW	7.5	7.9	6.3	6.0
	SCOP	W/W	5.1	5.1	5.1	5.1
			A+++	A+++	A+++	A+++
Power supply		V,Ph,Hz	220-240V,1Ph，50Hz	220-240V,1Ph，50Hz	220-240V,1Ph，50Hz	220-240V,1Ph，50Hz
Cooling Capacity	Rated(Min-Max)	kW	2.3(0.2-3.1)	2.5(0.2-2.9)	2.5(0.2-2.9)	2.2(0.2-2.4)
Heating Capacity	Rated(Min-Max)	kW	2.2(0.3-2.7)	2.2(0.3-2.9)	2.1(0.4-3.0)	2.0(0.3-2.4)
Outdoor air flow		m^3/h	4000	4000	4000	4000
Outdoor sound pressure level		dB(A)	61	61	61	61
Outdoor sound power level		dB(A)	67	67	69	69
Outdoor unit	Dimension(W×D×H)	mm	946×410×810	946×410×810	946×410×810	946×410×810
	Packing（W×D×H）	mm	1090×500×885	1090×500×885	1090×500×885	1090×500×885
	Net/Gross weight	kg	64.3/68.6	64.3/68.6	64.3/68.6	64.3/68.6
Refrigerant	Type		R32	R32	R32	R32
	GWP		675	675	675	675
	Charged quantity	kg	1.8	1.8	1.8	1.8
Design pressure		MPa	4.3/1.7	4.3//	4.3/1.7	4.3/1.7
Refrigerant piping	Liquid side/Gas side	mm(inch)	4×6.35mm(4×1/4in)/3×9.52mm+ 1×12.7mm(3×3/8in+1×1/2in)	4×6.35mm(4×1/4in)/3×9.52mm+ 1×12.7mm(3×3/8in+1×1/2in)	4×6.35mm(4×1/4in)/3×9.52mm+ 1×12.7mm(3×3/8in+1×1/2in)	4×6.35mm(4×1/4in)/3×9.52mm+ 1×12.7mm(3×3/8in+1×1/2in)
	Max. length for all rooms	m	80(20m for DHW)	80(20m for DHW)	80(20m for DHW)	80(20m for DHW)
	Max. length for one indoor unit	m	35	35	35	35
	Max. IU-OU height difference	m	15	15	15	15
	Max. IU-IU height difference	m	10	10	10	10
Qty'per 20' /40' /40'HQ		Outdoor unit	44/96/138	44/96/138	44/96/138	44/96/138

CirQHP Heat Recovery

HR Outdoor+DHW TANK

				HR Outdoor-27+DHW TANK-190	HR Outdoor-27+DHW TANK-100	HR Outdoor-18+DHW TANK-100
Tank				PLSX-190(30)/DN8-A	PBSX-100(30)/DN8-A	PBSX-100(30)/DN8-A
Outdoor Model				M4OA-27HFN8-Q(HRU)	M4OA-27HFN8-Q(HRU)	M3OA-18HFN8-Q(HRU)
Power supply			Ph-V-Hz	1ph/220-240V/50Hz	1ph/220-240V/50Hz	1ph/220-240V/50Hz
Nominal volume of the tank			L	190.0	100.0	100.0
Performance data	Water-heating Capacity (A15/12°C,W15-45°C)		kW	4.0	4.0	3.8
	COP (A15/12°C,W15-45°C)		kW/kW	4.0	4.0	6.0
	Heat-up time (A15/12°C,W15-45°C)	Time	h:min	1:25	0:48	0:55
ERP data (average climate) EN 16147: 2017 EN 12102-2:2019	Declared load profile		-	L	M	M
	Setting Temperature for the performance mesaurement	Tset	°C	52	55	55
	Daily electrical energy consumption	Qelec	kWh	4.450	2.237	2.205
	Coefficient of Performance	COPdhw	-	2.62	2.61	2.65
	Annual electrical energy consumption	AEC	kWh/a	799	475	465
	Water heating energy efficient	ηwh	%	128.0(smart)	108.0	110.0
	Energy class		-	A+	A+	A+
	Maximum volume of mixed water at 40°C	Vmax	L	240	108	108
	Heat-up time	Time	h:min	02:30	01:30	01:55
	Indoor sound Power Level		dB(A)	-	42	40
	Outdoor sound Power Level		dB(A)	64	64	58
ERP data (warmer climate) EN 16147: 2017 EN 12102-2:2019	Declared load profile		-	L	M	M
	Setting Temperature for the performance mesaurement	Tset	°C	52	55	55
	Daily electrical energy consumption	Qelec	kWh	3.960	2.331	1.825
	Coefficient of Performance	COPdhw	-	2.94	2.51	3.20
	Annual electrical energy consumption	AEC	kWh/a	705	485	365
	Water heating energy efficient	ηwh	%	145.0(smart)	105.0	140.0
	Energy class		-	-	-	-
	Maximum volume of mixed water at 40°C	Vmax	L	260	110	110
	Heat-up time	Time	h:min	01:58	01:35	01:35
	Indoor sound Power Level		dB(A)	-	42	40
	Outdoor sound Power Level		dB(A)	64	64	57

Indoor Uint

Dimensions	Dimension(H×W×D)		mm	1660×504×574	1060×555×500	1060×555×500
	Packing (H×W×D)		mm	1860×690×690	1280×630×575	1280×630×575
	Net/Gross weight		Kg	70/92	45.5/55.5	45.5/55.5
Electrical data	Power cable of the electrical herter		Quantity	2+Earth	2+Earth	2+Earth
	Section of the power cable of the electrical heater		mm^2	1.5	1.5	1.5
	Electrical heater	Power	kW	2.15	1.5	1.5
		Current	A	9.1	7	7
	Communication wries between the tank and the outdoor unit		mm^2	1.0 x 3 + EARTH	1.0 x 3 + EARTH	1.0 x 3 + EARTH
Water system	Water inlet pipe		-	DN20	DN15	DN15
	Water outlet pipe		-	DN20	DN15	DN15
	Drainage pipe		mm	-	-	-
	Max. pressure		MPa	0.8	0.8	0.8
Refrigerant piping	Liquid side/ Gas side		mm(inch)	6.35mm(1/4in)/9.52mm(3/8in)	6.35mm(1/4in)/9.52mm(3/8in)	6.35mm(1/4in)/9.52mm(3/8in)
	Max. length for tank		m	20	20	20
	Min. length for tank		m	5	5	5
	Max. height difference between tank and outdoor unit		m	315	315	315
Other information	Working range Outdoor Air Temperature (DHW)		°C	-15～+43	-15～+43	-15～+43
	Working range Indoor Air Temperature (DHW)		°C	+5～+43	+5～+43	+5～+43
	Water setting temperature (with E-Heater)		°C	Default 52，38～55(70)	Default 55，38～55(70)	Default 55，38～55(70)
	Smart mode minimum guaranteed water temperature		°C	Default 40	Default 40	Default 40
	Resistance class		-	IP21	IPX4	IPX4
	Tank Corrossion Protection		-	Magnesium Anode/Active Anode (optional)	Magnesium Anode/Active Anode (optional)	Magnesium Anode/Active Anode (optional)
	Tank Material		-	Enamelled steel	Enamelled steel	Enamelled steel

Outdoor Uint

Dimensions	Dimension(H×W×D)	mm	946×410×810	810×410×946	673×342×890
	Packing (H×W×D)	mm	1090×500×885	885×500×1090	750×438×1030
	Net/Gross weight	Kg	64.3/68.6	64.3/68.6	46.6/50.3
Electrical data	Power supply	Ph-V-Hz	1ph/220-240V/50Hz	1ph/220-240V/50Hz	1ph/220-240V/50Hz
	Rated current	A	23.5	23.5	18
	Rated power input	W	5300	5300	4100
Refrigerant	Refrigerant type/quantity	kg	R32/1.8	R32/1.8	R32/1.5
	Design pressure	MPa	4.3	4.3	4.3
	Liquid side	mm(inch)	4×6.35mm(1/4in)	4×6.35mm(1/4in)	3×6.35mm(1/4in)
	Gas side	mm(inch)	3×9.52mm(3/8in)+12.7mm(1/2in)	3×9.52mm(3/8in)+12.7mm(1/2in)	3×9.52mm(3/8in)
	Standard pipe length	m	30	30	20
	Additional refrigerant	kg/m	0.02	0.02	0.02
	Max. height difference between indoor and outdoor unit	m	315	315	315
Other information	Working range Outdoor Air Temperature (COOLING)	°C	-15～+50	-15～+50	-15～+50
	Working range Outdoor Air Temperature (HEATING)	°C	-15～+24	-15～+24	-15～+24
	Working range Outdoor Air Temperature (COOLING+DHW)	°C	-15～+50	-15～+50	-15～+50
	Working range Outdoor Air Temperature (HEATING+DHW)	°C	-	-	+5～+24

High-Efficiency Multi Split System

Feature

Appearance

Multiple Control Methods

Save Money: Apply for the German Smart Grid Subsidy

Devices with these three features are eligible to apply for the German smart grid subsidy.
Note: The function needs to be used with the OP+ indoor unit series.

Power Consumption Detection and Query:

We offer precise power consumption detection services that can individually monitor the power usage of each indoor unit in multi-split air conditioning systems. By measuring power consumption per indoor unit, you can gain a clearer understanding of each device's energy usage, enabling more efficient energy management.

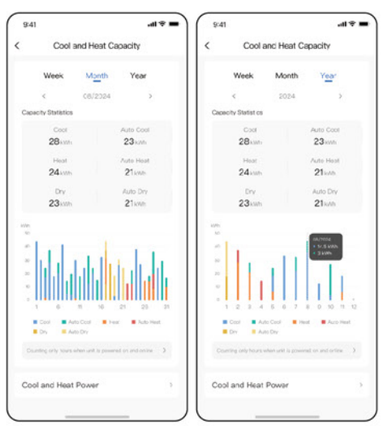

Capability Detection and Query:

Supports individual monitoring of each indoor unit's real-time cooling and heating capacity, allowing precise control of equipment operation status to ensure optimal performance.

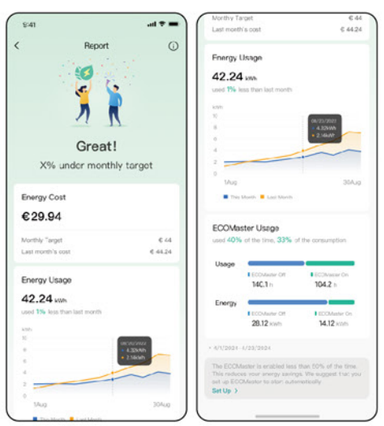

DR Function (Optional):

By adding the DR module, the device can receive unified power limitation control signals. Once the DR signal is received, the device will automatically switch to DR mode, optimizing operation to achieve low power consumption while ensuring efficient performance.

Flexible Space Cooling Solution

Max. **15M** Piping Height
Max. **80M** Piping Length For All Rooms
Max. **35M** Piping Length For One Indoor Unit

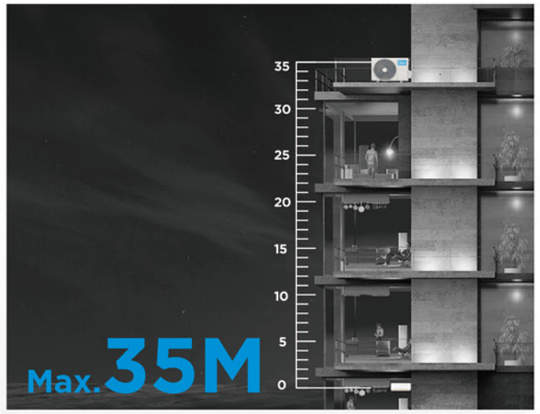

High-Efficiency

The perfect combination of high-efficiency compressor and high-performance condenser: Compared to standard line products, the outdoor unit features a larger condenser and air duct design, equipped with a high-efficiency compressor that significantly enhances overall performance. This design not only improves cooling efficiency but also ensures stable operation in various environments, providing users with a more comfortable experience and lower energy consumption

Compared to standard condensers, the condenser area is larger, with the **18K** dual-unit outdoor condenser area increased **by 22%** and the **27K** triple-unit outdoor condenser area increased **by 41%.**

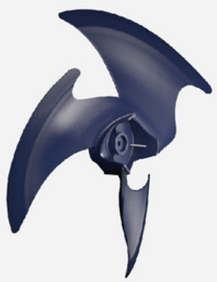

With a large fan blade design (increasing the diameter by **up to 23%** compared to standard outdoor unit fan blades), heat dissipation efficiency is enhanced, resulting in better energy-saving performance.

High-Efficiency Multi Split System

Outdoor			M2OF-18HFN8-Q	M3OC-27HFN8-Q
Seasonal Cooling	Pdesignc	kW	5.3	7.9
	Energy Efficiency Class		A+++-A++	A+++-A++
Heating (Average)	Pdesignh	kW	4.3	6.0
	SCOP	W/W	4.6	4.6
	Energy Efficiency Class		A++	A++
	Tbiv	°C	-7	-7
Heating (Warmer)	Pdesignh	kW	5.0	6.2
	SCOP	W/W	5.1	5.1
	Energy Efficiency Class		A+++	A+++
Power supply		V,Ph,Hz	220-240V- 50Hz, 1Ph	220-240V- 50Hz, 1Ph
Cooling Capacity	Rated	kW	5.3	7.9
Heating Capacity	Rated	kW	5.3	8.2
Outdoor air flow		m^3/h	3000	4000
Outdoor sound pressure level		dB(A)	59	62
Outdoor sound power level		dB(A)	65	66
Outdoor unit	Dimension(W×D×H)	mm	890×342×673	946×410×810
	Packing(W×D×H)	mm	1030×438×750	1090×500×885
	Net/Gross weight	kg	45.0/48.5	61.0/66.0
Refrigerant	Type		R32	R32
	GWP		675	675
	Charged quantity	Kg	1.5	2.1
Design pressure		MPa	4.3/1.7	4.3/1.7
Refrigerant piping	Liquid side/ Gas side	mm(inch)	2×6.35mm(2×1/4in)/2×9.52mm(2×3/8in)	3×6.35mm(3×1/4in)/2×9.52mm+ 1×12.7mm(2×3/8in+1×1/2in)
	Max. length for all rooms	m	40	60
	Max. length for one indoor unit	m	25	30
	Max. IU-OU height difference	m	15	15
	Max. IU-IU height difference	m	10	10
Qty'per 20' /40' /40'HQ		Outdoor unit	84/171/171	44/96/138

Standard Multi Split System

Feature

Appearance

Multiple Control Methods

Wired Controller | BMS Connection | Centralized Controller | Remote Controller | Smart Control

Advantages of Multi System

Wide Selection of Indoor Units

Provide a wide selection of indoor unit capacities and styles to suit a variety of room sizes and designs.

Space Saving and Low Noise

Connect to several indoor units to a single outdoor unit, save installation space and reduce outdoor noise.

No Ductwork

Able to cool or heat multiple zones without ductwork.

Lower Energy Consumption

Compared with multiple outdoor units running at the same time, multisystem can be an option to improve heat exchange and energy efficiency, reduce power consumption.

Individual Control

Provide individual control for each indoor unit, brings desired comfort and saves energy, since you can heat or cool only those rooms you are using versus the entire house.

Low Noise

When ambient temperature is low or during the night time, the air conditioner are much quieter during its operation, since they will automatically lower the frequency of inverter compressor as well as the DC fan motor speed. And with less outdoor units, the outdoor noise is also much lower.

Standard Multi Split System

Standard Multi-Split

Outdoor			M2OH-14HFN8-Q	M2OE-18HFN8-Q	M3OA-18HFN8-Q	M3OG-21HFN8-Q	M3OB-27HFN8-Q
Seasonal Cooling	Pdesignc	kW	4.1	5.3	5.3	6.1	7.9
	Energy Efficiency Class		A++	A++	A++	A++	A++
Heating (Average)	Pdesignh	kW	3.8	4.3	4.5	5.1	5.3
	Energy Efficiency Class		A+-A	A+-A	A+-A	A+-A	A+-A
Heating (Warmer)	Pdesignh	kW	4.1	5.0	5.0	5.7	6.0
	Energy Efficiency Class		A+++-A++	A+++-A++	A+++-A++	A+++-A++	A+++-A++
Power supply		V,Ph,Hz	220-240V,1Ph,50Hz	220-240V,1Ph,50Hz	220-240V,1Ph,50Hz	220-240V- 50Hz, 1Ph	220-240V,50Hz,1Ph
Cooling Capacity	Rated	kW	4.1	5.3	5.3	6.2	7.9
Heating Capacity	Rated	kW	4.1	5.3	5.3	6.2	7.9
Outdoor air flow		m^3/h	2100	2100	2100	3000	3000
Outdoor sound pressure level		dB(A)	56	55	57	58	60
Outdoor sound power level		dB(A)	64	65	65	67	69.0
Outdoor unit	Dimension(W×D×H)	mm	805×330×554	805×330×554	805×330×554	890×342×673	890×342×673
	Packing(W×D×H)	mm	915×370×615	915×370×615	950×370×615	1030×438×750	1030×438×750
	Net/Gross weight	kg	31.6/34.7	35/38	36.2/39.4	43.3/47.1	48/51.8
Refrigerant	Type		R32	R32	R32	R32	R32
	GWP		675	675	675	675	675
	Charged quantity	Kg	1.1	1.25	1.5	1.5	1.80
Design pressure		MPa	4.3/1.7	4.3/1.7	4.3/1.7	4.3/1.7	4.3/1.7
Refrigerant piping	Liquid side/Gas side	mm(inch)	2×6.35mm(2×1/4in)/ 2×9.52mm(2×3/8in)	2×6.35mm(2×1/4in)/ 2×9.52mm(2×3/8in)	3×6.35mm(3×1/4in)/ 3×9.52mm(3×3/8in)	3×6.35mm(3×1/4in)/ 3×9.52mm(3×3/8in)	3×6.35mm(3×1/4in)/ 3×9.52mm(3×3/8in)
	Max. length for all rooms	m	40	40	60	60	60
	Max. length for one indoor unit	m	25	25	30	30	30
	Max. IU-OU height difference	m	15	15	15	15	15
	Max. IU-IU height difference	m	10	10	10	10	10
Qty'per 20' /40' /40'HQ		Outdoor unit	114/234/312	114/234/312	111/228/304	84/171/171	84/171/171

Outdoor			M4OA-24HFN8-Q	M4OE-28HFN8-Q	M4OB-36HFN8-Q	M5OE-42HFN8-Q
Seasonal Cooling	Pdesignc	kW	7.1	8.2	10.3	12.3
	Energy Efficiency Class		A++	A++	A++	A++
Heating (Average)	Pdesignh	kW	5.8	6.0	8.4	9.3
	Energy Efficiency Class		A+-A	A+-A	A+-A	A
Heating (Warmer)	Pdesignh	kW	6.8	7.0	9.7	10
	Energy Efficiency Class		A+++	A+++-A++	A+++-A++	A++-A+
Power supply		V,Ph,Hz	220-240V,50Hz,1Ph	220-240V,1Ph,50Hz	220-240V,1Ph,50Hz	220-240V,1Ph,50Hz
Cooling Capacity	Rated	kW	7.0	8.2	10.3	12.3
Heating Capacity	Rated	kW	7.0	8.2	10.5	12.3
Outdoor air flow		m^3/h	3000	3800	4000	3850
Outdoor sound pressure level		dB(A)	60	63	62	63.0
Outdoor sound power level		dB(A)	70	69.0	70	71.0
Outdoor unit	Dimension(W×D×H)	mm	890×342×673	946×410×810	946×410×810	946×410×810
	Packing(W×D×H)	mm	1030×438×750	1090×500×885	1090×500×885	1090×500×885
	Net/Gross weight	kg	48.2/52.4	62.1/67.7	68.8/75.6	74.1/79.5
Refrigerant	Type		R32	R32	R32	R32
	GWP		675	675	675	675
	Charged quantity	Kg	2.0	2.1	2.1	2.9
Design pressure		MPa	4.3/1.7	4.3/1.7	4.3/1.7	4.3/1.7
Refrigerant piping	Liquid side/Gas side	mm(inch)	4×6.35mm(3×1/4in)/ 4×9.52mm(3×3/8in)	4×6.35mm(4×1/4in)/3×9.52mm+ 1×12.7mm(3×3/8in+1×1/2in)	4×6.35mm(4×1/4in)/3×9.52mm+ 1×12.7mm(3×3/8in+1×1/2in)	5×6.35mm(5×1/4in)/4×9.52mm+ 1×12.7mm(4×3/8in+1×1/2in)
	Max. length for all rooms	m	80	80	80	80
	Max. length for one indoor unit	m	35	35	35	35
	Max. IU-OU height difference	m	15	15	15	15
	Max. IU-IU height difference	m	10	10	10	10
Qty'per 20' /40' /40'HQ		Outdoor unit	84/171/171	44/96/138	44/96/138	44/96/138

BREEZELESS

Feature

Appearance

SOFT | All-New Air Dispersion Technology

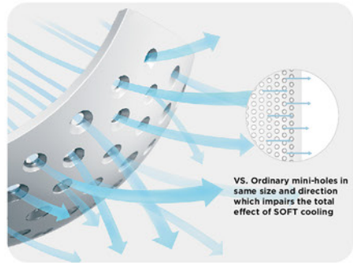

World's 1st

TwinFlap™

with Mini-holes

The two opposite flags can evolutionarily deflect and soften the harsh airflow, providing multiple wind modes as you want and an ultimate breezeless cooling experience.

Mini-hole Matrix

For Utmost Wind 'Elimination'

1,345 + 6,583 = 7,928

INNER FLAP OUTER FLAP

All 7,928 micro-holes on the two deflector flaps are designed to turn the air current into thousands of tiny strings of cool air moving in all directions. The matrix softens the airflow to the point where you can barely feel it, leaving you purely the cool.

Intricate

Hourglass Design

Cold air is pressured, emitted, mixed and dispersed evenly through each of the hourglass-shaped mini-holes, breezelessly dropping the room temperature

SURROUND | All-New Airflow Distribution

360°

SURROUND COOLING

The signature S-wing outlets on the two sided offer and immersive 360° cooling experience, allowing the breezeless coolness to reach every corner of the space.

Conventional AC

Single air vent
Uneven warming / cooling
Harsh, direct airflow

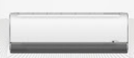

Breezeless

3 air outlets in 3 directions
Consistent temperaturer
room-wide No direct airflow, just cool

App-based Smart Functions

The MSmartHome app can help remotely control your BreezeleSS+ unit from anywhere and at anytime.

Twinflap Design with Multiple Wind Control

It adapts to your needs in the most sensitive way possible.

Oasis Plus

Feature

8°C Heating · Horizontal Swing · Sleep Mode · Low Ambient Kit · Auto Restart · Timer · I Remote · Vertical Swing · Golden Fin

Appearance

Greater Energy Savings

Hidden Millimeter-wave Radar

Midea cares about user privacy. By using hidden and non-intrusive detection sensor, it can automatically adjust the AC operation status based on the detection of subtle human movements in the room.

When you are away for 30 minutes, automatically lowers the frequency to save energy.

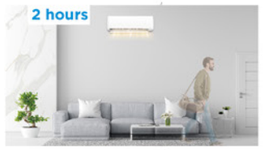

When you are away for 2 hours, the frequency automatically sets even lower.

When you returns to the room, automatically returns to operate at high frequency.

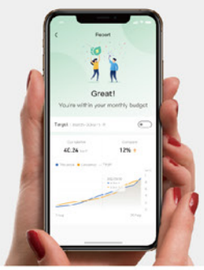

Manage Every Energy Step

- Check your every step on energy consumption anytime
- Weekly, monthly, and yearly reports are available on SmartHome APP
- Tailored energy-saving tips are also ready for you

Enhanced Intelligent Experience

LBS Geolocation Mode

Set your home location on the SmartHome APP, when you come back or leave home, the AC will turn on or off automatically.

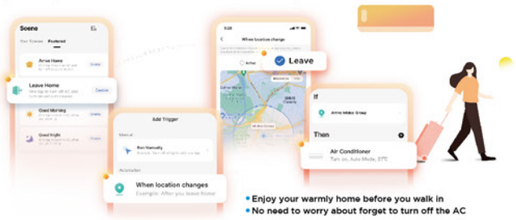

- Enjoy your warmly home before you walk in
- No need to worry about forget to turn off the AC

Personalize Your Smart Mode

Real Comfort Heating with Breeze Away Mode

Strong Long Windblast

Air Outlet width (mm)

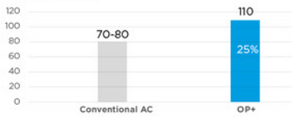

Long Windblast

Take 12000 BTU/h OP+ as an example, indoor fan is φ108mm wide, much bigger than Midea conventional AC as φ82-94mm.

Strong Airflow

Air outlet design is 110mm wide, 25% bigger than Midea conventional AC.

ALL EASY PRO

Feature

8°C Heating · Turbo Mode · Sleep Mode · Timer · Vertical Swing · Child Lock · LED · Golden Fin

Appearance

Easy to Install

Fast And Easy Wiring Solution

176MM large piping space with installation support clip. Front-placed E-BOX for convenient access wiring just opening the front pannel.

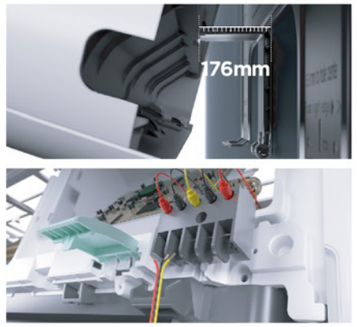

Flexible Space Cooling Solution

Requires Min. **5CM** Of Ceiling Distance

Easy to maintain

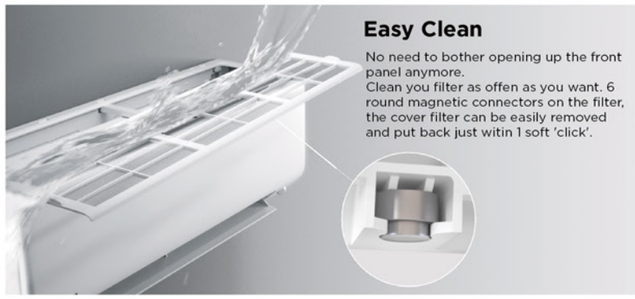

Easy Clean

No need to bother opening up the front panel anymore.
Clean you filter as offen as you want. 6 round magnetic connectors on the filter, the cover filter can be easily removed and put back just witin 1 soft 'click'.

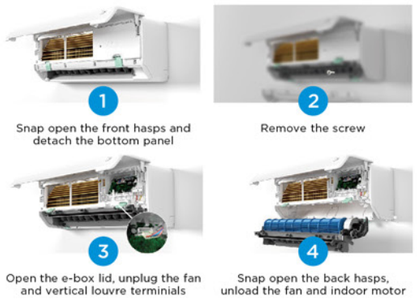

1. Snap open the front hasps and detach the bottom panel
2. Remove the screw
3. Open the e-box lid, unplug the fan and vertical louvre terminials
4. Snap open the back hasps, unload the fan and indoor motor

Easy to Cool with Smart

Wherever you are, you can keep your home comfortable using the SamrtHome APP. Start up your air conditioner on the way home to enjoy crisp, cool air the moment you walk in the door. The possibilities for comfort and convenience are endless.

SmartHome Smart Compatible

works with alexa · works with Google Home

Google and Google Home are trademarks of Google LLC.

Breezeless E

Feature

8˚C Heating · Healthy Filter · Long Distance windblast · Breezeless Technology · 1-100% Fan speed control · Horizontal Swing · wide Angle Airflow · Do Not Disturb · Golden Fin · Thermnostatic Technology · Vertical Swing · Air Magic+

Appearance

Intelligent Energy Management

The AI deep learning would automatically control the AC to infinitely reach the preset temperature according to user habits.

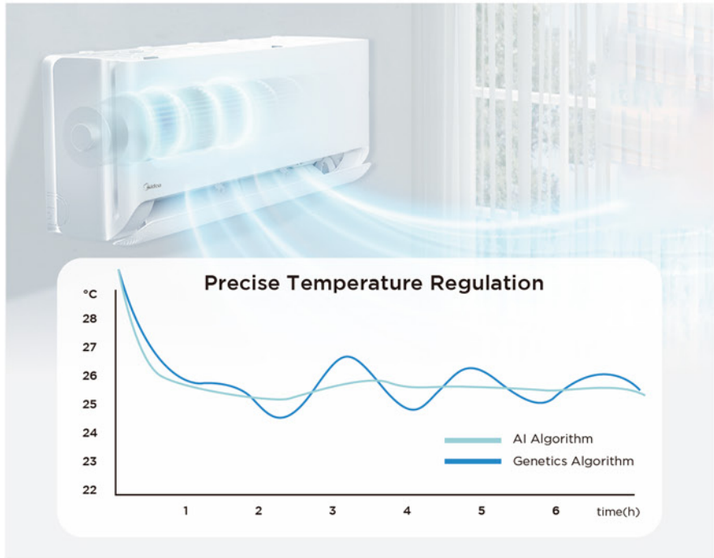

Manage Your Energy Consumption Footprints

- Periodic energy saving report
- Real-time energy consumption tracking
- Customized energy saving tips

3 Adjustable Breezeless Modes

Softly Cool You Down Without Noticeable Breeze.

Family Time
V≤0.5m/s | DR≤20

Work Time
V≤0.3m/s | DR≤20

Undisturbed Sleep
V≤0.3m/s | DR≤5

Solstice

Feature

Golden Fin · Auto Restart · Timer · I Remote · Sleep Mode · 8˚C Heating · Horizontal Swing · Vertical Swing · Air Magic+

Appearance

Pull Down Structure

Just loosen ONE screw to remove the pull down structure, and stretch out the built-in support lock.

The enlarged working space and improved visibility were developed for easier installation.

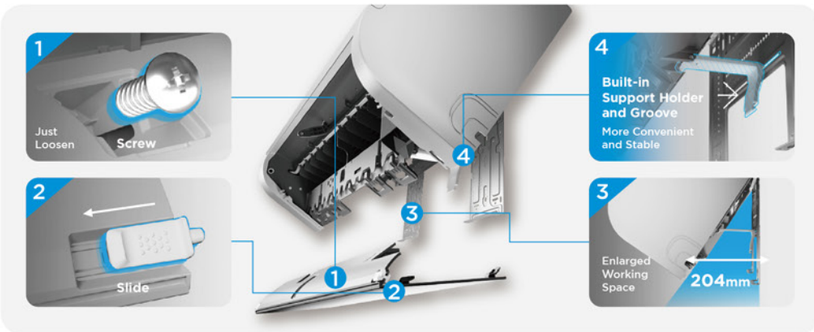

Unlimited Dynimic Rotating Unexpected Flash Cooling

180° rotating wind deflector:
Unintentionally even out temperature, unanticipated delight in comfort

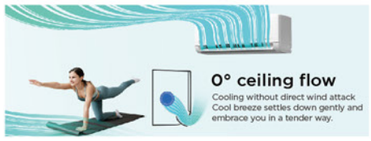

AI ECOMASTER
Faster and precise control, Achieving energy saving & comfort
1. Multiple input of complex environmental factors
2. Predict dynamically in indoor heat load and Environment changes

VS

Other EcoMode
Imprecise control, causing high temp fluctuation and waste of energy
1. Single input of indoor temperature
2. Proportional control without prediction

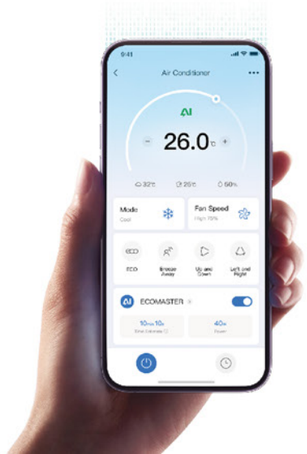

One click, full control

Smart control and energy monitor Within your fingertips

- Automatic delivery of periodic energy reports.
- Real time energy savings track.
- Tailor-made energy saving tips.

Smart Home — SmartHome Smart Compatible

Download on the App Store

works with alexa

works with Google Home

GET IT ON Google Play

Google and Google Home are trademarks of Google LL

Solunar

Feature

Golden Fin · Auto Restart · Timer · I Remote · Sleep Mode · 8°C Heating · Horizontal Swing · Vertical Swing

Appearance

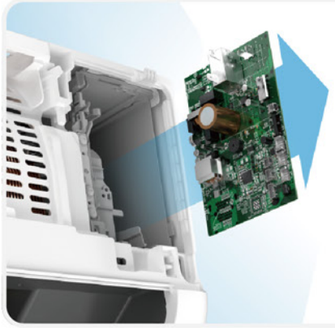

Pull-out PCB Design

Achieve PCB replacement without removing the panel frame.

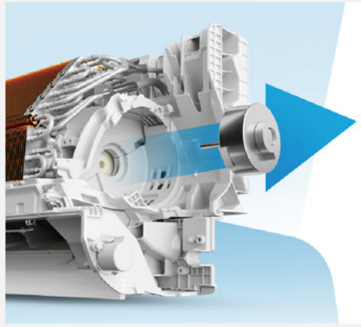

Fan Motor Repair Upgrade

Achieve motor replacement without removing the evaporator.

Unlimited Dynimic Rotating Unexpected Flash Cooling

180° rotating wind deflector:
Unintentionally even out temperature, unanticipated delight in comfort

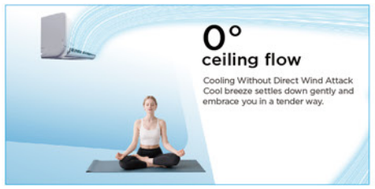

AI ECOMASTER
Faster and precise control, Achieving energy saving & comfort
1. Multiple input of complex environmental factors
2. Predict dynamically in indoor heat load and Environment changes

VS

Other EcoMode
Imprecise control, causing high temp fluctuation and waste of energy
1. Single input of indoor temperature
2. Proportional control without prediction

Perfectly Balance Efficiency & Comfort

ECOMASTER continues to function reliably even without an active Wi-Fi connection.

±30.3°C Precise Temp Control

30%+ Extra Energy Saving

Verified by SGS

Performance Tested
- AI Temperature Control Accurate to ± 0.3℃
- 30% Extra Energy Saving with AI Algorithm

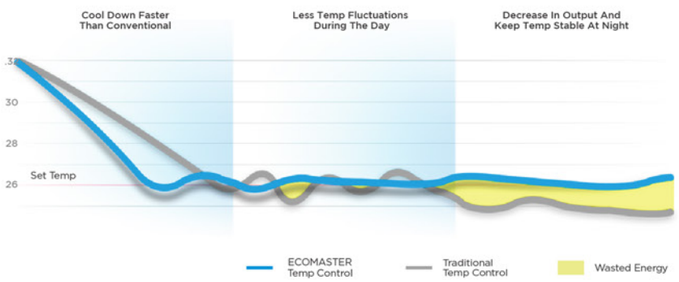

XTREME

Feature

8°C Heating · Healthy Filter · Smart Control · Thermnostatic Technology · wide Angle Airflow · Long Distance windblast · Turbo Mode · Do Not Disturb · Golden Fin

Appearance

Comfort

ThermoStatic Technology

Keeping you steadily cool within 30.5 °C

Thanks to the precise control of the Inverter Quattro™ 's micro-chip, The air conditioner can easily maintain the desired temperature by varying the compressor speed without repeatedly turning on and off, keeping you feel comfortable with steady temperature within 30.5°C.

3D Airflow(Optional)

The directional air-outlet moves automatically both horizontally and vertically, directing nice and cool airflow to fill in every corner of the room.

Smart

App-based Remote Control

Based on the cloud service under M-Smart Security Protocol, the MSmartHome app makes your home life easier, smarter and more comfortable with versatile functions just in hand.

Discover the MSmartHome to get your home life connected.

Download on the App Store · GET IT ON Google Play · Smart Home — SmartHome Smart Compatible

Wherever You Are
Simply download the MSmartHome app to control your home's air conditioning at anytime and from anywhere for ultimate convenience and peace of mind. Help your kids or grandparents operate the air conditioning, even when you're not at home.

Smart Diagnosis
Run an automatic physical exam of your AC unit to detect any potential malfunctions, and guard against failures.

Smart Sleep Curve
Set the most appropriate temperature curve for you and your family members. There're default modes for selection, or you can customize your own one.

Healthy Filters

Dual Filtration

The Dual Filtration system thoroughly eliminates harmful substances through the 2 steps, providing fresh and clean air to you.

STEP1:High Density Pre Filter
Dust
Dog hair · Dead mite feces · Fung

STEP2:Micro Protection Filter
Pollen (Allergen), smoke, micro dust(under 0.3um)
Flower pollen · Bacteria · Car exhaust fumes · Smoke

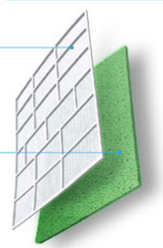

Breezeless

Indoor Model			MSFAAU-09HRFN8-QRD6GW	MSFAAU-12HRFN8-QRD6GW
Power supply		Ph-V-Hz	220-240V,1Ph,50Hz	220-240V,1Ph,50Hz
Cooling Capacity		Btu/h	9000	12000
Heating Capacity		Btu/h	13000	13000
Indoor air flow (Hi/Mi/Lo)		m^3/h	620/520/400	620/520/400
Indoor noise level (Hi/Mi/Lo)		dB(A)	38/33/20	38/33/20
Indoor unit	Dimension(W×D×H)	mm	940×193×325	940×193×325
	Packing(W×D×H)	mm	1055×385×290	1055×385×290
	Net/Gross weight	kg	10.6/13.8	10.6/13.8

Oasis Plus

Indoor Model			MSOPBU-09HRFN8-QRE1GW	MSOPBU-12HRFN8-QRE1GW	MSOPBU-17HRFN8-QRD6GW
Power supply		Ph-V-Hz	220-240V,1Ph,50Hz	220-240V,1Ph,50Hz	220-240V,1Ph,50Hz
Cooling Capacity		Btu/h	9000	12000	17000
Heating Capacity		Btu/h	13000	13000	19000
Indoor air flow (Hi/Mi/Lo)		m^3/h	548/489/383	548/489/383	710/500/400
Indoor noise level (Hi/Mi/Lo)		dB(A)	42.5/35/22	42.5/35/22	43/36.5/33
Indoor unit	Dimension(W×D×H)	mm	895×248×298	895×248×298	895×248×298
	Packing(W×D×H)	mm	985×370×350	985×370×350	985×370×350
	Net/Gross weight	kg	12.6/17.3	12.6/17.3	12.5/17.3

All Easy Pro

Indoor Model			MSEPBU-09HRFN8-QRD6GW	MSEPBU-12HRFN8-QRD6GW	MSEPCU-18HRFN8-QRD0GW	MSEPCU-24HRFN8-QRD0GW
Power supply		Ph-V-Hz	220-240V,1Ph,50Hz	220-240V,1Ph,50Hz	220-240V,1Ph,50Hz	220-240V,1Ph,50Hz
Cooling Capacity		Btu/h	9000	12000	17000	24000
Heating Capacity		Btu/h	10000	13000	18000	25000
Indoor air flow (Hi/Mi/Lo)		m^3/h	530/360/280	560/380/290	685/580/400	1092/724/379
Indoor noise level (Hi/Mi/Lo)		dB(A)	37/32/21.5	40/33/22	41/35/23	44.5/40/33
Indoor unit	Dimension(W×D×H)	mm	795×225×295	795×225×295	965×239×319	1140×370×275
	Packing(W×D×H)	mm	870×370×305	870×370×305	1045×400×325	1230×455×355
	Net/Gross weight	kg	10.2/13	10.2/13	12.3/16.4	20/25.3

Breezeless E

Indoor Model			MSCB1BU-07HRFN8-QRD1GW	MSCB1BU-09HRFN8-QRD1GW	MSCB1BU-12HRFN8-QRD1GW	MSCB1CU-18HRFN8-QRD1GW	MSCB1DU-24HRFN8-QRD1GW
Power supply		Ph-V-Hz	220-240V,1Ph,50Hz	220-240V,1Ph,50Hz	220-240V,1Ph,50Hz	220-240V,1Ph,50Hz	220-240V,1Ph,50Hz
Cooling Capacity		Btu/h	7000	9000	12000	18000	24000
Heating Capacity		Btu/h	8000	10000	13000	19000	25000
Indoor air flow (Hi/Mi/Lo)		m^3/h	340/250/210	510/415/375	520/420/380	835/620/510	1170/950/810
Indoor noise level (Hi/Mi/Lo)		dB(A)	31/28/22	37.0/32.0/20.5	37.5/35.5/21	41/36.5/32.5	45.0/40.5/30.5
Indoor unit	Dimension(W×D×H)	mm	812×199×299	812×199×299	812×199×299	968×320×225	1030×238×338
	Packing(W×D×H)	mm	870×277×385	870×277×385	870×277×385	1027×307×412	1125×430×345
	Net/Gross weight	kg	9.2/12.2	9.1/11.6	9.3/12.2	12.3/16.2	14.0/18.6

Solstice

Indoor Model			MSEZAU-09HRFN8-QRD6GW	MSEZBU-12HRFN8-QRD6GW	MSEZCU-18HRFN8-QRD6GW	MSEZDU-24HRFN8-QRD6GW
Power supply		Ph-V-Hz	220-240V,1Ph,50Hz	220-240V,1Ph,50Hz	220-240V,1Ph,50Hz	220-240V,1Ph,50Hz
Cooling Capacity		Btu/h	9000	12000	17000	24000
Heating Capacity		Btu/h	10000	13000	18000	25000
Indoor air flow (Hi/Mi/Lo)		m^3/h	510/360/285	600/450/370	800/600/470	1090/790/635
Indoor noise level (Hi/Mi/Lo)		dB(A)	39/34/25	39/32/26	43/36/28	46/39.5/32.5
Indoor unit	Dimension(W×D×H)	mm	723×199×286	813×201×289	975×218×308	1055×231×330
	Packing(W×D×H)	mm	780×270×365	870×270×365	1065×300×385	1130×405×310
	Net/Gross weight	kg	7.5/9.6	8/10.4	10.2/13.3	13/16.4

EF 4.0

Indoor Model			MSGPAU-07HRFN8-QRD1GW	MSGPAU-09HRFN8-QRD1GW	MSGPBU-12HRFN8-QRD2GW	MSGPCU-18HRFN8-QRD1GW	MSGPDU-24HRFN8-QRD1GW
Power supply		Ph-V-Hz	220-240V,1Ph , 50Hz	220-240V,1Ph , 50Hz	220-240V,1Ph , 50Hz	220-240V,1Ph , 50Hz	220-240V,1Ph , 50Hz
Cooling Capacity		Btu/h	7000	9000	12000	17000	24000
Heating Capacity		Btu/h	8000	10000	13000	18000	25000
Indoor air flow (Hi/Mi/Lo)		m^3/h	490/360/300	510/380/300	600/450/370	800/600/470	1039/752/606
Indoor noise level (Hi/Mi/Lo)		dB(A)	37.5/32.0/23.0/18.0	38.5/33.0/23.5/19.0	38/32./25/20	43.0/35.5/33.5/20.0	45.0/39.5/36.0/20.0
Indoor unit	Dimension(W×D×H)	mm	723×199×286	723×199×286	813×201×289	975×218×308	1055×231×330
	Packing(W×D×H)	mm	780×270×365	780×270×365	870×270×365	1035×295×385	1130×405×310
	Net/Gross weight	kg	6.9/9.1	7.0/9.2	8/10.3	10.4/13.4	12.4/15.9

Xtreme

Indoor Model			MSAGAU-07HRFNX-QRD1GW	MSAGAU-09HRFN8-QRD1GW	MSAGBU-12HRFN8-QRD1GW	MSAGAU-09HRFNX-QRD0GW	MSAGBU-12HRFNX-QRD0GW
Power supply		Ph-V-Hz	220-240V,1Ph,50Hz	220-240V,1Ph,50Hz	220-240V,1Ph,50Hz	220-240V,1Ph,50Hz	220-240V,1Ph,50Hz
Cooling Capacity		Btu/h	7000	9000	12000	9000	12000
Heating Capacity		Btu/h	8000	10000	13000	10000	13000
Indoor air flow (Hi/Mi/Lo)		m^3/h	430/330/280	460/330/260	570/490/450	460/330/260	530/400/350
Indoor noise level (Hi/Mi/Lo)		dB(A)	37/32/22	37/32/25	40.5/37.5/24	37/32/22	37/32/22
Indoor unit	Dimension(W×D×H)	mm	726×210×291	726×210×291	835×208×295	726×210×291	835×208×295
	Packing(W×D×H)	mm	790×270×375	790×270×375	905×355×290	790×270×375	905×355×290
	Net/Gross weight	kg	7.0/9.4	7.7/9.9	8.2/10.9	8.0/10.5	8.7/11.5

Indoor Model			MSAGBU-09HRFN8-QRD1GW(GA)	MSAGBU-12HRFN8-QRD1GW(GA)	MSAGCU-18HRFNX-QRD0GW	MSAGDU-24HRFN8-QRD0GW
Power supply		Ph-V-Hz	220-240V,1Ph,50Hz	220-240V,1Ph,50Hz	220-240V,1Ph,50Hz	220-240V,1Ph,50Hz
Cooling Capacity		Btu/h	9000	12000	18000	24000
Heating Capacity		Btu/h	10000	13000	19000	25000
Indoor air flow (Hi/Mi/Lo)		m^3/h	510/360/300	520/370/310	800/600/500	1090/770/610
Indoor noise level (Hi/Mi/Lo)		dB(A)	37/31/22	39/33/22	41/37/31	46/37/34.5
Indoor unit	Dimension(W×D×H)	mm	835×208×295	835×208×295	969×241×320	1083×244×336
	Packing(W×D×H)	mm	905×355×290	905×355×290	1045×315×405	1155×415×315
	Net/Gross weight	kg	8.7/11.5	8.7/11.3	11.2/14.6	13.6/17.3

02

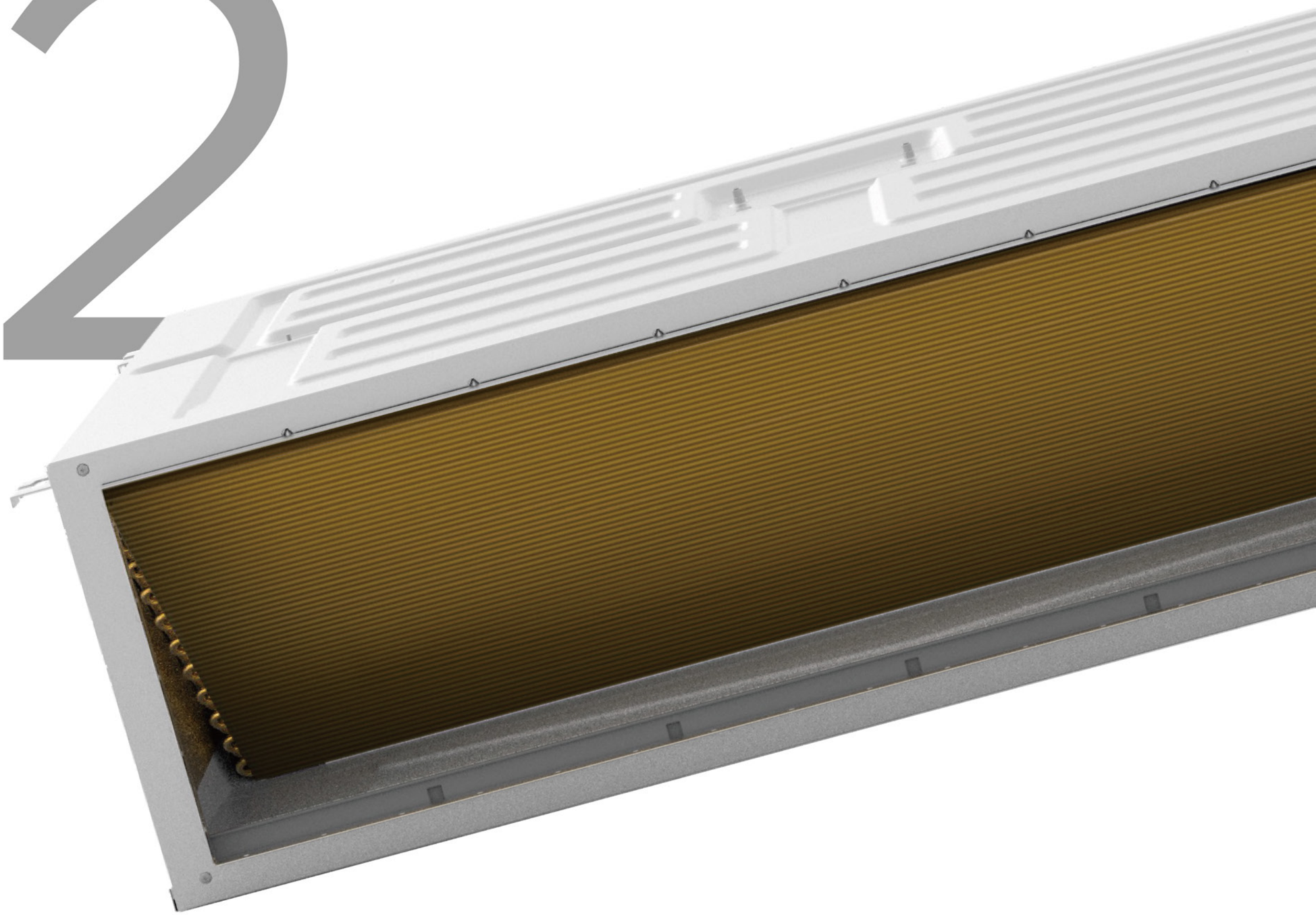

LIGHT-COMMERCIAL

Product overview Light Commercial					Capacity class								
Type	Product name	Appearance	Page	Features	9K	12K	18K	24K	30K	36K	42K	48K	55K
Duct	MTJ		43	• Slimmer and lighter, meet various installations in narrow ceilings • Real-time Constant Air Volume • Static Pressure Increase, the maximum ESP is increased to 160Pa for 18K24K	●	●	●	●	●	●	●	●	●
Round Flow Cassette	MCD1		47	• 360 round flow; • Individual Vane control (Optional); • Power Breezeless Technology ,exclusive power breezeless wind deflector(Optional) ; • Built in water pump.				●	●	●	●	●	●
Round Flow Compact Cassette	MCA4		51	• 360 round flow; • Individual Vane control (Optional); • Power Breezeless Technology ,exclusive power breezeless wind deflector(Optional) ; • Built in water pump.	●	●	●						
Ceiling & Floor	MUE		53	• Supports left and right sweeping angles of 120° • Supports optional built-in water pump. • Can easily be mounted in corners and narrow spaces, as it only needs 30mm lateral service space • Even rooms with ceilings up to 3.8m can be heated up or cooled down very easily without capacity loss • Can easily be installed in both new and refurbishment projects			●	●		●		●	●
Console	MFA2U		55	• Can easily be installed in both new and refurbishment projects. • Dual air outlets satisfy both cooling and heating needs in different seasons and allows a quick comfort of the room.	●	●	●						
Floor standing	MFFN		59	• 25 Meters Long Distance Wind Blast • The hidden VLED display screen is easy to read and beautiful • Colorful Mode Lights • The floor-standing installation makes the maintenance easy • The Beauty of Design （Fashionable&Novel • Innovative 3WD Air Outlet								●	●
	MFM		61	• The floor-standing installation makes the maintenance easy • Intelligent anti-direct blowing function to avoid discomfort caused by hot and cold wind blowing directly • The control buttons are embedded into the body, so that the unit can be controlled with only a gentle touch								●	●

● standard ○ optional

			Duct	Round Flow Cassette	Round Flow Compact Cassette	Ceiling & Floor	Console	Floor standing units	
			MTJ	MCD1	MCA4	MUE	MFA2	MFFN	MFM
									
Comfort	Fresh air	At the same time of cooling and heating, the room is ventilated to make the indoor air fresher and healthier.	●	●	●	●			
Comfort	Auto defrosting	The air conditioner automatically enters the defrosting mode to remove frosting from the outdoor unit.	●	●	●	●	●	●	●
Comfort	Anti-cold air function	Prevent cold wind from blowing out when heating in winter, improve user comfort.	●	●	●	●	●	●	●
Comfort	Real-time constant air volume	Automatic adjustment according to pipeline resistance, output constant air volume, easy installation, reduce installation and debugging time.	●						
Comfort	360° air flow panel	The design avoids airflow dead corners and increases airflow coverage in the room.		●	●	●			
Comfort	Sleep mode	Sleep mode reduces the difference between the ambient temperature and the set temperature, saving electricity and ensuring a restful and comfortable sleep.	●	●	●	●	●	●	●
Comfort	Wide-angle air flow	The wide-angle wind is more average than the ordinary wind, and the wind is stronger, and the indoor air can be mixed and evenly dispersed faster.		●	●	●		●	●
Comfort	Wind avoid me	Control the air outlet adjustment Angle of the air conditioner does not blow directly to the person, to avoid the cold air/hot air blowing directly to the person causing discomfort.		●	●			●	●
Air flow	Air filter	Removes airborne dust particles to ensure a steady supply of clean air.	●	●	●	●	●	●	●
Air flow	Dry mode	Allows humidity levels to be reduced without variations in room temperature.	●	●	●	●	●	●	●
Air flow	Fan speed steps	Allows to select up to the given number of fan speed.	●	●	●	●	●	●	●
Intelligent control	Touch control	It is currently the most simple, convenient and natural way of human-computer interaction.						●	●
Intelligent control	Hidden vled display	This display can achieve the needs of information display while maintaining the integrity and aesthetics of the air conditioner appearance.						●	
Intelligent control	Smart home app	Control your indoor climate from any location via smartphone or tablet.	●	●	●	●	●	●	●
Intelligent control	Timer	Can be set to start heating or cooling anytime on a daily or weekly basis.	●	●	●	●	●	●	●
Intelligent control	Infrared remote control	Starts, stops and regulates the air conditioner from a distance.	○	●	●	●	●	●	●
Intelligent control	WIFI	The air conditioner is connected to a wireless network and can be remotely controlled by mobile devices such as mobile phones.	○	○	○	○	○		
Intelligent control	Wired remote control	Starts, stops and regulates the air conditioner.	●	○	○	○	○		
Intelligent control	Centralised control	Starts, stops and regulates several air conditioners from one central point.	○	○	○	○	○		
Reliablity	Self-diagnosis& auto-protection	Simplifies maintenance by indicating system faults or operating anomalies.	●	●	●	●	●	●	●
We care	Home leave operation	Maintains the indoor temperature at your specified comfort level during absence,thus saving energy.	●	●	●	●	●	●	●
We care	Fan only	The unit can be used as fan, blowing air without heating or cooling.	●	●	●	●	●	●	●
We care	ECO mode	This mode reduces energy consumption and saves energy while maintaining indoor comfort as much as possible.	●	●	●	●	●	●	●
We care	Quiet operation	Midea indoor units are whisper quiet. Also the outdoor units are guaranteed not to disturb the quiet of the neightbourhood.	●	●	●	●	●	●	●
Other functions	Build-in drain pump	Facilitates condensation draining from the indoor unit.	●	●	●				
Other functions	Power down memory	After the air conditioner is powered off and then powered on, it remembers the working state before the power failure and automatically returns to the working mode.	●	●	●	●	●	●	●
Other functions	Rotation:intelligent dusting switch	By turning the fan in the opposite direction, the dust that accumulates inside the external machine is blown out and negative pressure is formed inside the fan, thus playing a cleaning role.	●	●	●	●	●	●	●

Duct

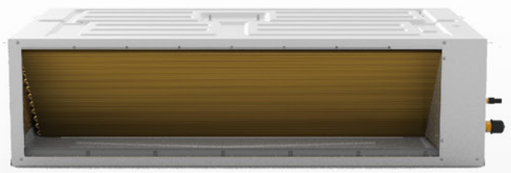

Standard Features

Independent Dehumidification · Auto Defrosting · 2-way Draining · Auto Restart · Weekly Timer · Wired Control · Golden Fins · Real-time Constant Air Volume

Appearance

Optional Features

Build-in Drain Pump · Fresh Air · Remote Control · WIFI · Central Control

Clip-type air filter

Magnetic-type air filter

Drain pump kit

Wired Romote Controller

Compatible Zone Controller Brands

Midea Airzone

EASIER INSTALLATION

Customized for Installation

Real-Time Constant Air Volume

With Auto Airflow Match, New Duct can automatically match the airflow volume to different ducting designs, resulting in installation convenience, comfortable experience and cost saving.

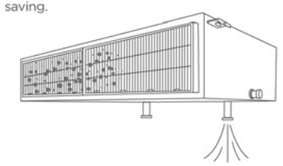

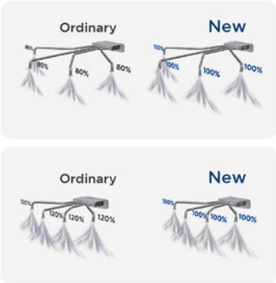

Static Pressure

The maximum ESP is increased to 160Pa.

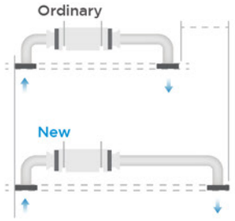

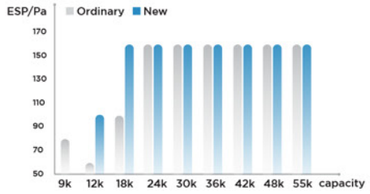

Built-In Drain Pump

Higher lift is upgraded from 0.75m to 1m, increasing flexibility and installation speed.

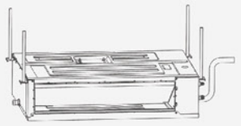

Old	New
750mm lift	1000mm lift

*Available for 18k-55k model

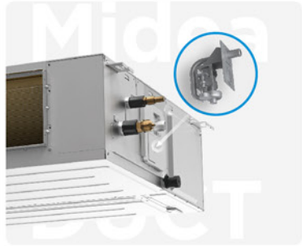

SLIMMER, LIGHTER, QUIETER

Customized for Installation

Slimmer and

Possible to install in narrow ceilings due to shorter length and slimmer dimensions.

Indoor unit size

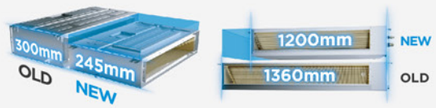

The New Duct has a 20% reduction in volume compared to the Old Duct.

Lower Noise Level

The indoor noise level of New Duct has been dropped by up to 6dB comparing with Old Duct.

*Data drawn from 55k model

Two Possible Installation Methods

Choose between ceiling or floor concealed installation.

*Available for 18k-55k model

Twin/ Double Twin/ Triple applications and controls

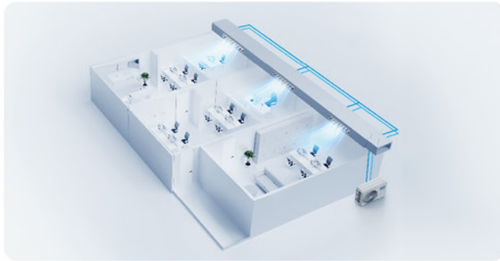

Optimizations of Fan Section

Structural improvements of fan section are made to improve the efficiency of heat transfer and reduce vibration.

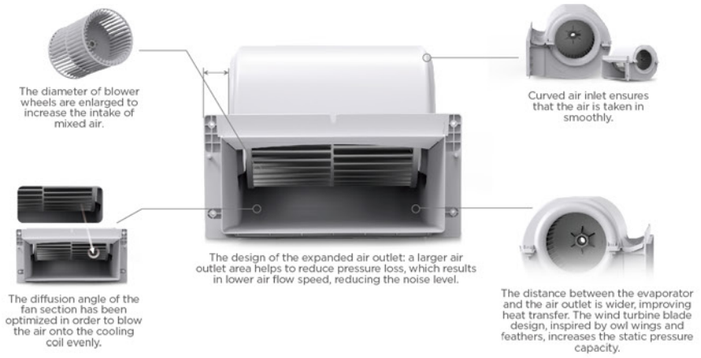

Old Duct

New Duct

UPGRADE OF PARTS

Customized for Installation

Upgrade of Electric Control

The area of the electric control box has been increased by 10%, and the driver board has been reduced, creating 40% more space. A larger maintenance space makes replacing the electronic control box easier.

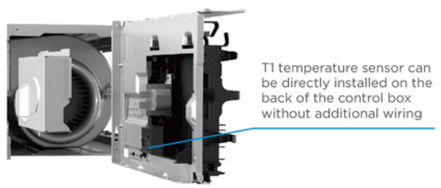

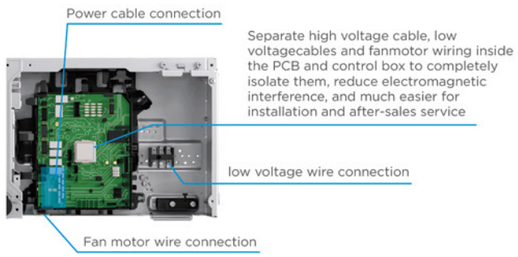

Upgrade of Fan Motor

The design of the integrated motor bracket, previously consisting of three parts, now integrated into one, improves installation stability and facilitates disassembly and assembly.

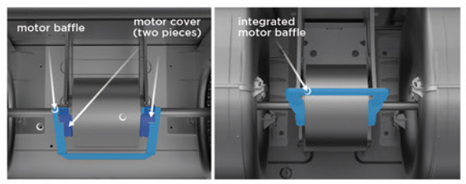

The spiral spring buckle design improves installation stability and makes disassembly and assembly more friendly.

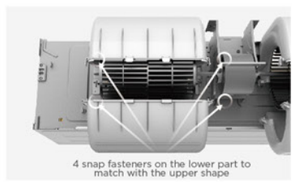

Upgrade of Drain Pump

Service area of New Duct is 20% more than A6. When replacing the drain pump and temperature sensor, the process has been simplified to minimize maintenance time.

Water pump + pipe clamps

Duct

Indoor Model			MTJ-09HWFNX-QRD1W(GA)	MTJ-12HWFNX-QRD1W(GA)	MTJ-18HWFNX-QRD1W(GA)	MTJ-24HWFNX-QRD1W(GA)	MTJ-30HWFNX-QRD1W(GA)	MTJ-36HWFNX-QRD0W(GA)	MTJ-36HWFNX-QRD0W(GA)	MTJ-42HWFNX-QRD0W(GA)	MTJ-48HWFNX-QRD0W(GA)	MTJ-48HWFNX-QRD0W(GA)	MTJ-55HWFNX-QRD0W(GA)
Outdoor Model			MOX230-09HFN8-QRD1W(GA)	MOX230-12HFN8-QRD0W(GA)	MOX330U-18HFN8-QRD0W(GA)	MOX430U-24HFN8-QRD1W(GA)	MOD30U-30HFN8-QRD1W(GA)	MOD30U-36HFN8-QRD0W(GA)	MOD30U-36HFN8-RRD0W(GA)	MOD30U-42HFN8-QRD0W(GA)	MOX630U-48HFN8-QRD0W(GA)	MOX630U-48HFN8-RRD0W(GA)	MOX630U-55HFN8-RRD0W(GA)
Average	Pdesignc	kW	2.6	3.5	5.3	7.1	8.8	10.5	10.6	12.1	14.0	14.0	15.3
	SEER	W/W	6.5	6.5	6.5	6.6	6.6	6.3	6.1	6.1	6.1	5.8	6.1
	Energy Efficiency Class		A++	A++	A++	A++	A++	A++	A++	A++	A++	A+	A++
	Seasonal space cooling energy efficiency(ηs,c)	%	—	—	—	—	—	—	—	241	241	229	241
	Pdesignh	kW	2.1	2.6	4.3	5.6	8.0	8.4	8.8	9.5	11.5	11.5	12.5
	SCOP	W/W	4.1	4.1	4.1	4.2	4.2	4.1	4.0	4.0	4.0	4.0	4.0
	Energy Efficiency Class		A+	A+	A+	A+	A+	A+	A+	A+	A+	A+	A+
	Seasonal space heating energy efficiency(ηs,h)	%	—	—	—	—	—	—	—	157	157	157	157
Warmer	Pdesignh	kW	2.8	3.4	5.2	6.5	8.2	10	10	10.2	11.5	11.2	12.8
	SCOP	W/W	5.1	5.1	5.1	5.4	5.5	5.1	5.1	5.1	5.1	5.1	5.1
	Energy Efficiency Class		A+++	A+++	A+++	A+++	A+++	A+++	A+++	A+++	A+++	A+++	A+++
	Seasonal space heating energy efficiency(ηs,h)	%	—	—	—	—	—	—	—	201	201	201	201
Power supply(Indoor)		V,Hz,Ph	220-240V,1Ph,50Hz	220-240V,1Ph,50Hz	220-240V,1Ph,50Hz	220-240V,1Ph,50Hz	220-240V,1Ph,50Hz	220-240V,1Ph,50Hz	220-240V,1Ph,50Hz	220-240V,1Ph,50Hz	220-240V,1Ph,50Hz	220-240V,1Ph,50Hz	220-240V,1Ph,50Hz
Power supply(Outdoor)		V,Hz,Ph	220-240V,1Ph,50Hz	220-240V,1Ph,50Hz	220-240V,1Ph,50Hz	220-240V,1Ph,50Hz	220-240V,1Ph,50Hz	220-240V,1Ph,50Hz	380-415V,3Ph,50Hz	220-240V,1Ph,50Hz	220-240V,1Ph,50Hz	380-415V,3Ph,50Hz	380-415V,3Ph,50Hz
Cooling Capacity	Rated(Min-Max)	kW	2.64(0.35-3.82)	3.52(0.53-3.91)	5.28(1.32-6.16)	7.09(3.23-7.92)	8.79(2.23-9.97)	10.55(2.75-11.73)	10.55(2.726-11.73)	12.11(2.93-12.31)	14.07(3.52-14.95)	14.07(3.52-15.83)	15.24(4.10-17.29)
Heating Capacity	Rated(Min-Max)	kW	2.93(0.94-3.48)	3.81(1.00-4.47)	6.01(1.50-6.31)	7.6 (2.79-8.56)	9.38(2.70-10)	11.72(2.78-12.61)	11.72(2.78-12.84)	13.48(3.37-14.07)	16.12(4.11-17.30)	16.12(4.11-17.59)	18.18(4.40-20.52)
Indoor air flow		m^3/h	620/540/450	660/570/470	900/780/650	1200/1000/700	1500/1200/900	1700/1400/1100	1700/1400/1100	2000/1700/1300	2000/1700/1300	2000/1700/1300	2200/1900/1500
ESP	Rated	Pa	25	25	25	25	37	37	37	50	50	50	50
	Range	Pa	0-80	0-100	0-160	0-160	0-160	0-160	0-160	0-160	0-160	0-160	0-160
Indoor sound pressure level		dB(A)	35/33/31	35/33/31	36.5/34/31	33.5/32.5/31	39/37/35	38/36/33	40/37/34	39/37.5/36	46/44/42	43.5/41.5/39.5	44.5/43/41.5
Indoor sound power level		dB(A)	55	55	53	56	61	62	62	62	64	65	66
Outdoor sound pressure level (Hi)(1.0m)		dB(A)	53	55.5	59	60	60	65	65	63.5	64	64.5	64
Outdoor sound pressure level (Hi)(1.5m)		dB(A)	48	50	49.5	55	56	62	61	59	58.5	60	61
Outdoor sound power level (Hi)		dB(A)	62	63	62	69	70	70	70	72	74	73	75
Indoor unit	Dimension (W×D×H)	mm	700×450×200	700×450×200	700×750×245	1000×750×245	1000×750×245	1200x750x245	1200×750×245	1200×750×245	1200×750×245	1200×750×245	1200×750×300
	Packing (W×D×H)	mm	860×540×285	860×540×285	925×850×298	1225×860×304	1225×860×304	1425x860x304	1425×860×304	1425×860×304	1425×860×304	1425×860×304	1425×860×354
	Net/Gross weight	kg	16.6/19.8	16.6/19.8	24.4/29	31.8/37.2	32.7/38.3	38.4/44.4	38.4/44.4	40.6/46.1	40.4/46.8	40.4/46.8	42.9/49.1
Refrigerant piping	Liquid side/ Gas side	mm	6.35mm(1/4in)/ 9.52mm(3/8in)	6.35mm(1/4in)/ 9.52mm(3/8in)	6.35mm(1/4in)/ 12.7mm(1/2in)	9.52mm(3/8in)/ 15.9mm(5/8in)	9.52mm(3/8in)/ 15.9mm(5/8in)	9.52mm(3/8in)/ 15.9mm(5/8in)	9.52mm(3/8in)/ 15.9mm(5/8in)	9.52mm(3/8in)/ 15.9mm(5/8in)	9.52mm(3/8in)/ 15.9mm(5/8in)	9.52mm(3/8in)/ 15.9mm(5/8in)	9.52mm(3/8in)/ 15.9mm(5/8in)
	Piping OU-IU MAX	m	25	25	30	50	50	75	75	75	75	75	75
	Level difference IU-OU MAX	m	10	10	20	25	25	30	30	30	30	30	30
Qty'per 20' /40' /40'HQ		Indoor unit	214/461/519	214/461/519	112/242/290	83/170/186	83/170/186	74/156/174	74/156/174	74/156/174	74/156/174	74/156/174	66/135/158
Qty'per 20' /40' /40'HQ		Outdoor unit	132/264/352	132/264/352	114/234/312	99/198/198	44/96/138	44/96/138	44/96/138	44/96/138	44/96/96	44/96/96	44/96/96

Remarks:1.The above design and specifications are subject to change without prior notice for product improvement.

Round Flow Cassette

Feature

Appearance

Wired Romote Controller (Optional)

T-MBQ4-04A1

T-MBQ4-04AD
(Independent Air Guide)

T-MBQ4-04AWD
(Independent Air Guide + Breezeless)

Wireless Remote Controller

The following remote controls correspond to the Comfort Perfectionist, Versatile Cassette and Super Slim Cassette from left to right.

RG10N3(2HS)/BGEF

RG10A5(B)BGEF

RG10F(B)/BGEF

Re-structure Drain Pump

30 minutes faster for water pump maintenance

Thanks to the innovative WindTrack design, the drain pump is placed outside the air channel, which means ultra easy access to drain pump that all you need is to remove the panel.

Lifting height up to 1000 mm

Equipped with a external drain pump, Midea Cassette can lift condensate water up to 1000mm,making the installation and the discharge of condensate water much easier.

Enlarge Space For Piping

More friendly for handwork operation

User-friendly Hook Design

Curved metal hook with more ergonomics easier to carry and uplift the machine.

0-100% Stepless fan speed

0-100% fan speed can be precisely controlled in 1%increments, breaking the traditional fixed fan speed.

Power Breezeless Technology

Exclusive power breezeless wind deflector contains over 3920 micro-holes. Each hole is in hourglass- shaped to boost then disperse the air stream as it funneis through all the micro-holes are distributed in different direction and size together turning the strong blast into cool, billowing mist.

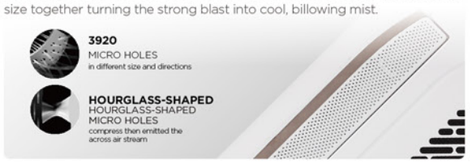

Adjustable Vane and Long Airflow

Adjustable Vane from 0° to 75°and 5.5 meters long airflow, no corner in your room is beyond its reach.

Individual Vane Control

The individual vane control system enables the unit to supply multi-directional airflow and customize everyone's comfort with a multitude of cooling configurations.

360° Round Flow

Unique seamless airflow louver design allows cool air to diffuse and sink in 360°, offering uniform cooling experience throughout the space.

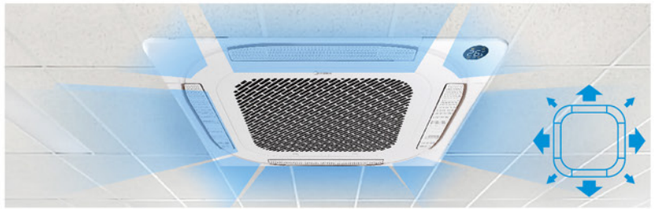

Reserved Air Outlet For Duct

Reserves the space for air outlet from the side of indoor unit. It's available to connect air duct from side to small rooms nearby.

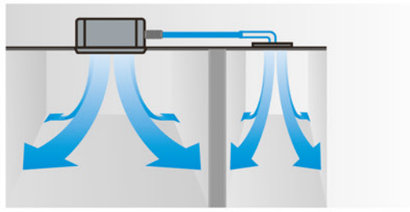

Midea Twins Combination System

The units can be installed as twin system: 2 same type and size indoor units connect to only one outdoor unit which size is double of single indoor unit. This feature helps improve the air distribution of some special room.

In twin system, one indoor unit must be set as master and the other one as slave. Only the master unit can accept the control signal and the slave unit follow the settings of the master.

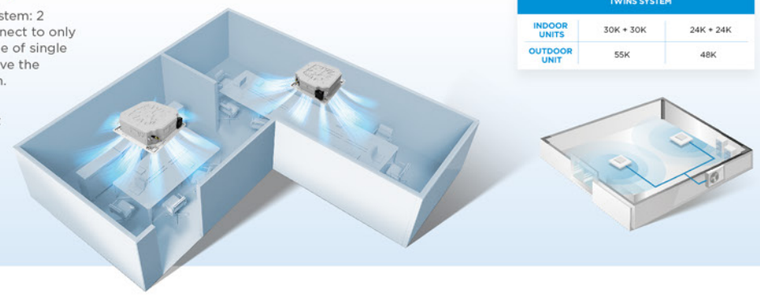

TWINS SYSTEM		
INDOOR UNITS	30K + 30K	24K + 24K
OUTDOOR UNIT	55K	48K

Fresh Air

Outdoor air can be led into the room via a connection pipe, which keeps the indoor air fresh and healthy.

Positive and negative ion sterilization (optional)

The positive and negative ion generator achieves sterilization by producing a large number of positive and negative ions, utilizing their characteristics. (Installed at the air guide ring position).

Dual Filtration System (optional)

Eliminate harmful substances in two successive steps and provide fresh and clean air for you.

LED Display

Larger LED display design, easier to check temperature at any time.

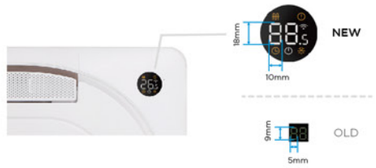

Water Tray

The water tray is specially upgraded from anti-corrosion plastic material, increased thickness and optimized structure, assuring greater durability and longer product life.

Prime Guard, Golden Coating

Midea PrimeGuard™ is more resistant in oxidation & corrosion than ordinary fins for condensers to furnish a steadier and long-lasting working environment.
It can efficiently prevent bacteria from breeding and spreading, and withstand corrosive elements.

Comparison Result of Corrosion Area*

Golden Coating is 2.5X corrosion resistance than Blue Coating.

*After 240 hours UV test and 72 hours neutral salt spray(fog) test

Round Flow Cassette

Indoor Model			MCD1-24HRFNX-QRD0W(GA)	MCD1-30HRFNX-QRD0W(GA)	MCD1-36HRFN8-QRD0W(GA)	MCD1-36HRFN8-QRD0W(GA)	MCD1-42HRFNX-QRD0W(GA)	MCD1-48HRFNX-QRD0W(GA)	MCD1-48HRFNX-QRD0W(GA)	MCD1-55HRFNX-QRD0W(GA)
Outdoor Model			MOX430U-24HFN8-QRD1W(GA)	MOD30U-30HFN8-QRD1W(GA)	MOD30U-36HFN8-QRD0W(GA)	MOD30U-36HFN8-RRD0W(GA)	MOD30U-42HFN8-QRD0W(GA)	MOX630U-48HFN8-QRD0W(GA)	MOX630U-48HFN8-RRD0W(GA)	MOX630U-55HFN8-RRD0W(GA)
Average	Pdesignc	kW	7.1	8.8	10.5	10.5	12.1	14.0	14.0	15.3
	SEER	W/W	6.3	6.6	6.7	6.3	6.1	6.1	5.8	5.8
	Energy Efficiency Class		A++	A++	A++	A++	A++	A++	A+	A+
	Seasonal space cooling energy efficiency（ηs,c)	%	—	—	—	—	—	241	229	229
	Pdesignh	kW	6.2	7.7	8.5	8.0	9.5	11.2	11.2	11.8
	SCOP	W/W	4.1	4.2	4.0	3.9	4.0	4.0	4.0	4.0
	Energy Efficiency Class		A+	A+	A+	A	A+	A+	A+	A+
	Seasonal space heating energy efficiency（ηs,h)	%	—	—	—	—	—	157	157	157
Warmer	Pdesignh	kW	6.3	7.8	10.1	10.1	9.8	11.1	11.1	11.5
	SCOP	W/W	5.4	5.1	5.1	5.1	5.1	5.1	5.1	4.9
	Energy Efficiency Class		A+++	A+++	A+++	A+++	A+++	A++	A+++	A++
	Seasonal space heating energy efficiency（ηs,h)	%	—	—	—	—	—	201	201	193
Power supply （Indoor）		V,Hz,Ph	220-240V,1Ph,50Hz	220-240V,1Ph,50Hz	220-240V,1Ph,50Hz	220-240V,1Ph,50Hz	220-240V,1Ph,50Hz	220-240V,1Ph,50Hz	220-240V,1Ph,50Hz	220-240V,1Ph,50Hz
Power supply （Outdoor）		V,Hz,Ph	220-240V,1Ph,50Hz	220-240V,1Ph,50Hz	220-240V,1Ph,50Hz	380-415V,3Ph,50Hz	220-240V,1Ph,50Hz	220-240V,1Ph,50Hz	380-415V,3Ph,50Hz	380-415V,3Ph,50Hz
Cooling Capacity	Rated(Min-Max)	kW	7.03(3.29-7.91)	8.79(2.23-9.38)	10.55(2.70-11.43)	10.55(2.70-11.43)	12.02(2.93-12.31)	14.07(3.52-15.83)	14.07(3.52-15.83)	15.24(4.10-16.12)
Heating Capacity	Rated(Min-Max)	kW	7.62(2.79-8.50)	9.38(2.70-9.73)	11.14(2.78-12.30)	11.14(2.78-12.66)	13.48(3.37-14.07)	16.12(4.20-17)	16.12(4.10-17.29)	18.17(4.40-19.05)
Indoor air flow (Hi/Mi/Lo)		m^3/h	1247/1118/992	1700/1530/1300	1700/1530/1300	1700/1530/1300	1900/1750/1600	1900/1750/1600	1900/1750/1600	2000/1850/1650
Indoor sound pressure level (Hi)		dB(A)	45/42.5/37/27.5	50.5/48/46/40	51/48/46/40	51/49/46/39	52.5/50/47.5/40	53/50.5/45/39	51.5/49.0/46.5/38.5	53/50.5/45.5/40
Indoor sound power level (Hi)		dB(A)	59	63	64	64	66	66	66	66
Outdoor sound pressure level (Hi)(1.0m)		dB(A)	60	60	65	65	63.5	64	64.5	64
Outdoor sound pressure level (Hi)(1.5m)		dB(A)	55	56	62	61	59	58.5	60	61
Outdoor sound power level (Hi)		dB(A)	68	70	70	70	72	73	73	75
Indoor unit	Dimension (W×D×H)(body)	mm	830×830×205	830×830×245	830×830×245	830×830×245	830×830×287	830×830×287	830×830×287	830×830×287
	Packing （W×D×H)(body)	mm	910×910×250	910×910×290	910×910×290	910×910×290	910×910×330	910×910×330	910×910×330	910×910×330
	Dimension (W×D×H)(panel)	mm	950×950×55	950×950×55	950×950×55	950×950×55	950×950×55	950×950×55	950×950×55	950×950×55
	Packing （W×D×H)(panel)	mm	1035×1035×90	1035×1035×90	1035×1035×90	1035×1035×90	1035×1035×90	1035×1035×90	1035×1035×90	1035×1035×90
	Net/Gross weight(body)	kg	21.6/25.4	24.6/28.6	27.2/31.2	27.2/31.2	29.3/33.5	29.3/33.5	29.3/33.5	29.3/33.5
	Net/Gross weight	kg	6/9	6/9	6/9	6/9	6/9	6/9	6/9	6/9
Refrigerant piping	Liquid side/ Gas side	mm	9.52mm(3/8in)/15.9mm(5/8in)	9.52mm(3/8in)/15.9mm(5/8in)	9.52mm(3/8in)/15.9mm(5/8in)	9.52mm(3/8in)/15.9mm(5/8in)	9.52mm(3/8in)/15.9mm(5/8in)	9.52mm(3/8in)/15.9mm(5/8in)	9.52mm(3/8in)/15.9mm(5/8in)	9.52mm(3/8in)/15.9mm(5/8in)
	Piping OU-IU MAX	m	50	50	75	75	75	75	75	75
	Level difference IU-OU MAX	m	25	25	30	30	30	30	30	30
Qty'per 20' /40' /40'HQ		Indoor unit	108/234/260	96/208/234	96/208/234	96/208/234	84/182/208	84/182/208	84/182/208	84/182/208
Qty'per 20' /40' /40'HQ		Outdoor unit	99/198/198	44/96/138	44/96/138	44/96/138	44/96/138	44/96/96	44/96/96	44/96/96

Round Flow Compact Cassette

Feature

Appearance

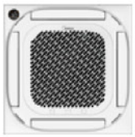

T-MBQ4-03A

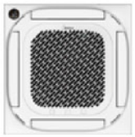

T-MBQ4-03AD
(Independent Air Guide)

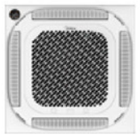

T-MBQ4-03AWD
(Independent Air Guide + Breezeless)

Positive and negative ion sterilization (optional)

The positive and negative ion generator achieves sterilization by producing a large number of positive and negative ions, utilizing their characteristics. (Installed at the air guide ring position).

Adjustable Vane and Long Airflow

Adjustable Vane from 0° to 75°and 5.5 meters long airflow, no corner in your room is beyond its reach.

Individual Vane Control

The individual vane control system enables the unit to supply multi-directional airflow and customize everyone's comfort with a multitude of cooling configurations.

0-100% Stepless fan speed

0-100% fan speed can be precisely controlled in 1% increments, breaking the traditional fixed fan speed.

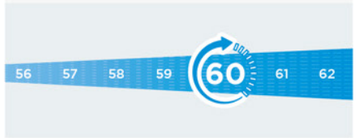

360° Round Flow

Unique seamless airflow louver design allows cool air to diffuse and sink in 360°, offering uniform cooling experience throughout the space.

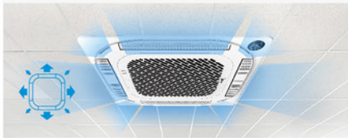

Fresh Air

Outdoor air can be led into the room via a connection pipe, which keeps the indoor air fresh and healthy.

Dual Filtration System (optional)

Eliminate harmful substances in two successive steps and provide fresh and clean air for you.

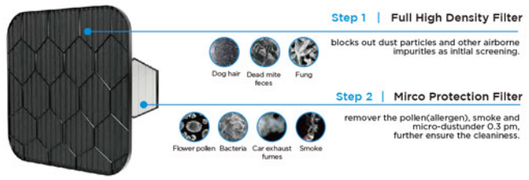

Golden Coating Technology

Golden Coating Technolgoy is more resistant in oxidation & corrosion than ordinary fins.
Golden Coating is 2.5X corrosion resistance than Blue Coating.

Indoor Model			MCA4U-09HRFNX-QRD1W(GA)	MCA4U-12HRFNX-QRD1W(GA)	MCA4U-18HRFNX-QRD1W(GA)
Outdoor Model			MOX230-09HFN8-QRD1W(GA)	MOX230-12HFN8-QRD0W(GA)	MOX330U-18HFN8-QRD0W(GA)
Average	Pdesignc	kW	2.6	3.5	5.3
	SEER	W/W	6.2	6.8	6.5
	Energy Efficiency Class		A++	A++	A++
	Seasonal space cooling energy efficiency(ηs,c)	%	—	—	—
	Pdesignh	kW	2.0	2.7	4.2
	SCOP	W/W	4.0	4.1	4.1
	Energy Efficiency Class		A+	A+	A+
	Seasonal space heating energy efficiency(ηs,h)	%	—	—	—
	Pdesignh	kW	2.8	3.3	5.3
Warmer	SCOP	W/W	5.1	5.1	5.1
	Energy Efficiency Class		A+++	A+++	A+++
	Seasonal space heating energy efficiency(ηs,h)	%	—	—	—
Power supply (Indoor)		V,Hz,Ph	220-240V,1Ph，50Hz	220-240V,1Ph，50Hz	220-240V,1Ph，50Hz
Power supply (Outdoor)		V,Hz,Ph	220-240V,1Ph，50Hz	220-240V,1Ph，50Hz	220-240V,1Ph，50Hz
Cooling Capacity	Rated(Min-Max)	kW	2.64(0.36-3.40)	3.52(0.85-4.16)	5.28 (2.90-5.59)
Heating Capacity	Rated(Min-Max)	kW	2.93(0.45-3.61)	3.81(0.47-4.34)	5.57 (2.37-6.10)
Indoor air flow (Hi/Mi/Lo)		m^3/h	500/460/400	620/520/330	660/540/300
Indoor sound pressure level (Hi)		dB(A)	37.0/35.5/33.0/26.0	42/38.5/31.5/25.5	44/41/31.5/25
Indoor sound power level (Hi)		dB(A)	52	55	59
Outdoor sound pressure level (Hi)(1.0m)		dB(A)	53	55.5	59
Outdoor sound pressure level (Hi)(1.5m)		dB(A)	48	50	49.5
Outdoor sound power level (Hi)		dB(A)	63	62	65
Indoor unit	Dimension (W×D×H)(body)	mm	570×570×245	570×570×245	570×570×245
	Packing (W×D×H)(body)	mm	715×640×295	715×640×295	715×640×295
	Dimension (W×D×H)(panel)	mm	620×620×50	620×620×50	620×620×50
	Packing (W×D×H)(panel)	mm	715×700×115	715×700×115	715×700×115
	Net/Gross weight(body)	kg	14.6/17.5	16.1/18.8	16.2/19
	Net/Gross weight(panel)	kg	2.7/4.3	2.7/4.3	2.7/4.3
Refrigerant piping	Liquid side/ Gas side	mm	6.35mm(1/4in)/9.52mm(3/8in)	6.35mm(1/4in)/9.52mm(3/8in)	6.35mm(1/4in)/12.7mm(1/2in)
	Piping OU-IU MAX	m	25	25	30
	Level difference IU-OU MAX	m	10	10	20
Qty'per 20' /40' /40'HQ		Indoor unit	216/432/486	216/432/486	216/432/486
Qty'per 20' /40' /40'HQ		Outdoor unit	132/264/352	132/264/352	114/234/312

Remarks:1.The above design and specifications are subject to change without prior notice for product improvement.

Ceiling & Floor

Feature

Appearance

Wired Romote Controller (Optional)

Wireless Remote Controller

The following remote controls correspond to the Comfort Perfectionist, Versatile Cassette and Super Slim Cassette from left to right.

RG10N3(2HS)/BGEF RG10A5(B)BGEF RG10F(B)/BGEF

3D AIRFLOW

Vertical air flow and horizontal airflow can be adjusted by remote controller to direct air flow to every corner of the room.

95° vertical swing | 70° horizontal swing | 10m Windblast

X-WIND

To make the cool air reaching you everywhere in the room.

Inverter Type Indoor unit outlet air speed and coverage range

@COOLING MODE	Air flow (m³/h)
18K	958
24K	1192
36K	1955

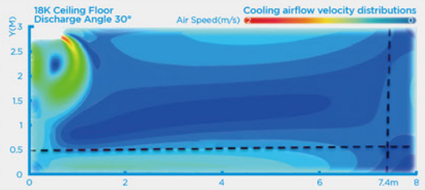

FRESH AIR

People can breath the fresh air but doesn't need to open the window by hands. A extra connection pipe can bring the freshness from Outside.

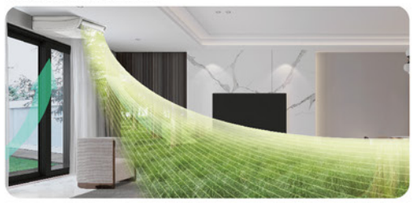

TIMER

With the wired controller, users can set the air conditioner to turn on or turn off within a 24-hour period, with a minimal interval of 0.5 hour.

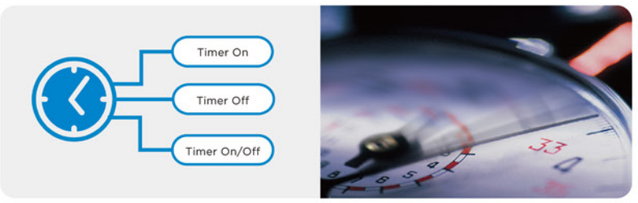

INDEPENDENT DEHUMIDIFICATION

Say goodbye to heat and humidity, and create a dry and comfortable living environment.

EASY INSTALLATION

Fashionable design and streamline appearance, suitable for different room styles.

3-way Pipe Out

The connection pipe can be put into the unit from bottom, side or rear, which makes installation much easier.

2-way Drainage

Both right side and left side rainage holes are available to avoid the space limitation for drainage pipe installation.

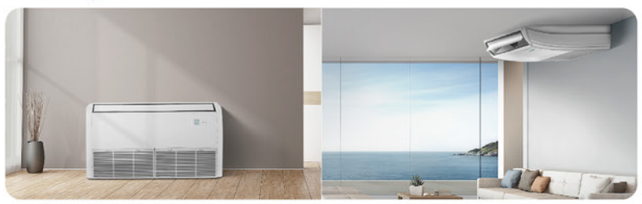

Indoor Model			MUEU-18HRFNX-QRD0W(GA)	MUE-24HRFNX-QRD0W(GA)	MUE-36HRFNX-QRD0W(GA)
Outdoor Model			MOX330U-18HFN8-QRD0W(GA)	MOX430U-24HFN8-QRD1W(GA)	MOD30U-36HFN8-QRD0W(GA)
Average	Pdesignc	kW	5.4	7.1	10.5
	SEER	W/W	6.2	6.3	6.4
	Energy Efficiency Class		A++	A++	A++
	Seasonal space cooling energy efficiency(η s,c)	%	—	—	—
	Pdesignh	kW	4.0	5.9	8.6
	SCOP	W/W	4.0	4.1	4.1
	Energy Efficiency Class		A+	A+	A+
	Seasonal space heating energy efficiency(η s,h)	%	—	—	—
Warmer	Pdesignh	kW	5.1	5.7	10.0
	SCOP	W/W	5.1	5.4	5.1
	Energy Efficiency Class		A+++	A+++	A+++
	Seasonal space heating energy efficiency(η s,h)	%	—	—	—
Power supply (Indoor)		V,Hz,Ph	220-240V,1Ph,50Hz	220-240V,1Ph,50Hz	220-240V,1Ph,50Hz
Power supply (Outdoor)		V,Hz,Ph	220-240V,1Ph,50Hz	220-240V,1Ph,50Hz	220-240V,1Ph,50Hz
Cooling Capacity	Rated(Min-Max)	kW	5.28(2.71-5.86)	7.03(3.22-7.95)	10.55(2.73-11.43)
Heating Capacity	Rated(Min-Max)	kW	5.57(2.42-6.30)	7.62(2.72-8.50)	11.72(2.78-12.78)
Indoor air flow (Hi/Mi/Lo)		m³/h	958/839/723	1192/1023/853	1955/1728/1504
Indoor sound pressure level (Hi)		dB(A)	44/41/37/24	49.5/45.5/36.5/22.5	51.5/48/45/39
Indoor sound power level (Hi)		dB(A)	59	63	65
Outdoor sound pressure level (Hi)(1.0m)		dB(A)	59	60	65
Outdoor sound pressure level (Hi)(1.5m)		dB(A)	49.5	55	62
Outdoor sound power level (Hi)		dB(A)	65	69	70
Indoor unit	Dimension (W×D×H)	mm	1068×675×235	1068×675×235	1650×675×235
	Packing (W×D×H)	mm	1155×760×310	1155×760×310	1735×760×310
	Net/Gross weight	kg	28/33.3	28/33.1	41.5/48
Refrigerant piping	Liquid side/Gas side	mm	6.35mm(1/4in)/12.7mm(1/2in)	9.52mm(3/8in)/15.9mm(5/8in)	9.52mm(3/8in)/15.9mm(5/8in)
	Piping OU-IU MAX	m	30	50	75
	Level difference IU-OU MAX	m	20	25	30
Qty'per 20' /40' /40'HQ		Indoor unit	102/220/252	102/220/252	72/147/167
Qty'per 20' /40' /40'HQ		Outdoor unit	114/234/312	99/198/198	44/96/138

Indoor Model			MUE-36HRFNX-QRD0W(GA)	MUE-48HRFNX-QRD0W(GA)	MUE-48HRFNX-QRD0W(GA)	MUE-55HRFNX-QRD0W(GA)
Outdoor Model			MOD30U-36HFN8-RRD0W(GA)	MOX630U-48HFN8-QRD0W(GA)	MOX630U-48HFN8-RRD0W(GA)	MOX630U-55HFN8-RRD0W(GA)
Average	Pdesignc	kW	10.5	14.0	14.0	15.3
	SEER	W/W	6.2	6.1	5.8	5.8
	Energy Efficiency Class		A++	A++	A+	A+
	Seasonal space cooling energy efficiency(η s,c)	%	—	241	241	229
	Pdesignh	kW	8.6	11.2	11.2	11.8
	SCOP	W/W	4.0	4.0	4.0	4.0
	Energy Efficiency Class		A+	A+	A+	A+
	Seasonal space heating energy efficiency(η s,h)	%	—	157	157	157
Warmer	Pdesignh	kW	10.2	11.5	11.5	11.5
	SCOP	W/W	5.1	5.1	5.1	5.1
	Energy Efficiency Class		A+++	A+++	A+++	A+++
	Seasonal space heating energy efficiency(η s,h)	%	—	201	201	201
Power supply (Indoor)		V,Hz,Ph	220-240V,1Ph,50Hz	220-240V,1Ph,50Hz	220-240V,1Ph,50Hz	220-240V,1Ph,50Hz
Power supply (Outdoor)		V,Hz,Ph	380-415V,3Ph,50Hz	220-240V,1Ph,50Hz	380-415V,3Ph,50Hz	380-415V,3Ph,50Hz
Cooling Capacity	Rated(Min-Max)	kW	10.55(2.73-11.78)	14.07(3.52-15.83)	14.07(3.52-15.24)	15.24(4.10-16.12)
Heating Capacity	Rated(Min-Max)	kW	11.72(2.81-12.78)	16.12(4.10-17.30)	16.12(4.10-17.59)	18.17(4.40-19.35)
Indoor air flow (Hi/Mi/Lo)		m³/h	1955/1728/1504	2100/1850/1600	2100/1850/1600	2200/1950/1650
Indoor sound pressure level (Hi)		dB(A)	51/47.5/45/37	53/49/42.5/36	51/49/43/35	53/50/42/36
Indoor sound power level (Hi)		dB(A)	65	67	68	70
Outdoor sound pressure level (Hi)(1.0m)		dB(A)	65	64	64.5	64
Outdoor sound pressure level (Hi)(1.5m)		dB(A)	61	58.5	60	61
Outdoor sound power level (Hi)		dB(A)	70	74	73	75
Indoor unit	Dimension (W×D×H)	mm	1650×675×235	1650×675×235	1650×675×235	1650×675×235
	Packing (W×D×H)	mm	1735×760×310	1735×760×310	1735×760×310	1735×760×310
	Net/Gross weight	kg	41.5/48	41.7/48.5	41.7/48.5	42.3/49.2
Refrigerant piping	Liquid side/ Gas side	mm	9.52mm(3/8in)/15.9mm(5/8in)	9.52mm(3/8in)/15.9mm(5/8in)	9.52mm(3/8in)/15.9mm(5/8in)	9.52mm(3/8in)/15.9mm(5/8in)
	Piping OU-IU MAX	m	75	75	75	75
	Level difference IU-OU MAX	m	30	30	30	30
Qty'per 20' /40' /40'HQ		Indoor unit	72/147/167	72/147/167	72/147/167	72/147/167
Qty'per 20' /40' /40'HQ		Outdoor unit	44/96/138	44/96/96	44/96/96	44/96/96

Remarks:1.The above design and specifications are subject to change without prior notice for product improvement.

Console

Feature

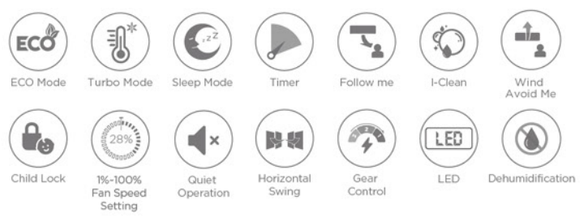

Appearance

Wired Romote Controller (Optional)

Wireless Remote Controller

The following remote controls correspond to the Comfort Perfectionist, Versatile Cassette and Super Slim Cassette from left to right.

RG10N3(2HS)/BGEF RG10A5(B)BGEF RG10F(B)/BGEF

Efficient Cooling & Heating Performance

Efficiently improve air volume, providing constant, quick cooling and heating throughout whole year.

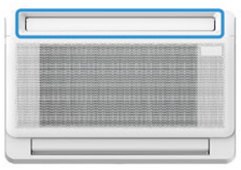

65.3% LARGER upper air outlet*

Dimension changes from 516mm*43mm to 655mm*56mm

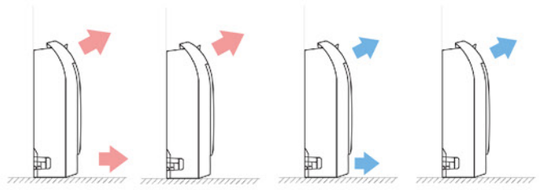

* Compared to last generation Midea console unit

94.1% WIDER lower air outlet*

99mm large lower air out deliver even warm air distribution

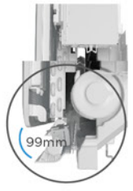

Wide Airflow & Constant Comfort

Dual air outlets satisfy both cooling and heating needs in different seasons and allows a quick comfort of the room.

360° Immersive Heating Comfort

Thanks to the larger size of the dual airflow outlets, Console unit creates a heating circulation in the whole room to make you feel more comfortable

Better Compatibility

Available in single room set-up or multi connection and compatible with more scenes.

Multi Connection via one outdoor unit

console can be used in a single room set-up, with one indoor unit connected to one outdoor unit, or in a multiple room application with a maximum of 5 indoor units connected to one outdoor unit.

Compatible with more scenes

Midea console units allows a complete integration into controlling networks, satisfying multiple projects needs.

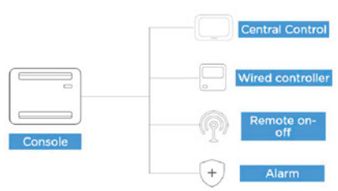

Quieter Operation

Specially optimized fan creates high energy efficiency operating at minimum 20.9dB(A) low noise level.

Easy Maintenance

Easy operation led by new mounting plate, removable front panel and easy-to-clean filter.

Stepless Fan Control

New console brings users more accurate wind speed control from 1-100%, not only high, middle and low speed control. More comfortable, more flexible, and more energy efficiency.

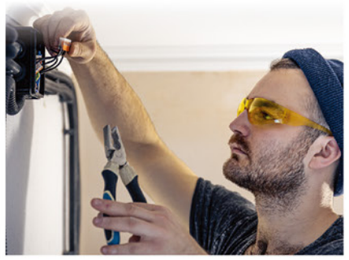

Air Quality

We care your indoor air quality from many perspectives.

Get Ideal HUMIDITY for You!

Efficiently dehumidify the air to keep the ambient air dry and at comfort humidity level.

Display screen on front panel is reliable and user-friendly to operate to use.

Ion-Generator for a Space with Better Air Quality (optional).

A built-in positive & negative ion generator in Midea console produces powerful ions that binds to and neutralises airborne pollutants for a cleaner environment.

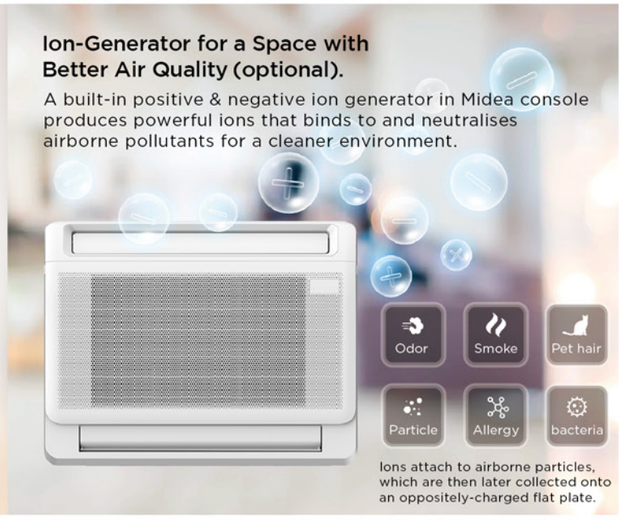

Ions attach to airborne particles, which are then later collected onto an oppositely-charged flat plate.

Console

Console

Indoor			MFA2U-09HRFNX-QRD0W(GA)	MFA2U-12HRFNX-QRD0W(GA)	MFA2U-17HRFNX-QRD0W(GA)
Outdoor			MOX230-09HFN8-QRD1W(GA)	MOX230-12HFN8-QRD0W(GA)	MOX330U-18HFN8-QRD0W(GA)
Average	Pdesignc	kW	2.6	3.5	5.0
	SEER	W/W	7.8	7.3	6.7
	Energy Efficiency Class		A++	A++	A++
	Pdesignh	kW	2.0	2.6	4.0
	SCOP	W/W	4.1	4.0	4.0
	Energy Efficiency Class		A+	A+	A+
Warmer	Pdesignh	kW	2.5	3.4	5.0
	SCOP	W/W	5.1	5.5	5.0
	Energy Efficiency Class		A+++	A+++	A++
Power supply (Indoor)		V,Hz,Ph	220-240V,1Ph,50Hz	220-240V,1Ph,50Hz	220-240V,1Ph,50Hz
Power supply (Outdoor)		V,Hz,Ph	220-240V,1Ph,50Hz	220-240V,1Ph,50Hz	220-240V,1Ph,50Hz
Cooling Capacity	Rated(Min-Max)	kW	2.64(0.36-3.81)	3.52(0.76-4.25)	4.98(2.64-5.57)
Heating Capacity	Rated(Min-Max)	kW	2.93(0.44-3.96)	3.81(0.45-4.69)	5.28(2.20-6.30)
Indoor air flow (Hi/Mi/Lo)		m^3/h	600/510/400	650/580/490	780/690/600
Indoor sound pressure level (Hi)		dB(A)	36.5/33.5/27.5/22.0	37/34/27/23	41/38/32/26
Indoor sound power level (Hi)		dB(A)	50	55	56
Outdoor sound pressure level(Hi) (1.0m)		dB(A)	53	55.5	59
Outdoor sound pressure level(Hi) (1.5m)		dB(A)	48	50	49.5
Outdoor sound power level (Hi)		dB(A)	62	63	64
Indoor unit	Dimension(W×D×H)	mm	794×200×621	794×200×621	794×200×621
	Packing(W×D×H)	mm	865×280×719	865×280×719	865×280×719
	Net/Gross weight	Kg	14.9/18.8	14.9/18.8	14.9/18.8
Refrigerant piping	Liquid side/ Gas side	mm	6.35mm(1/4in)/9.52mm(3/8in)	6.35mm(1/4in)/9.52mm(3/8in)	6.35mm(1/4in)/12.7mm(1/2in)
	Piping OU-IU MAX	m	25	25	30
	Level difference IU-OU MAX	m	10	10	20
Qty'per 20' /40' /40'HQ		Indoor unit	168/344/390	168/344/390	168/344/390
Qty'per 20' /40' /40'HQ		Outdoor unit	132/264/352	132/264/352	114/234/312

Console High Efficiency

Indoor			MFA2U-09HRFN8-QRD6W(GA)	MFA2U-12HRFN8-QRD6W(GA)
Outdoor			MOX230-09HFN8-QRD6W(GA)	MOX430-12HFN8-QRD6W(GA)
Average	Pdesignc	kW	2.6	3.6
	SEER	W/W	8.5	8.5
	Energy Efficiency Class		A+++	A+++
	Pdesignh	kW	2.8	3.6
	SCOP	W/W	4.6	4.6
	Energy Efficiency Class		A++	A++
Power supply (Indoor)		V,Hz,Ph	220-240V,1Ph,50Hz	220-240V,1Ph,50Hz
Power supply (Outdoor)		V,Hz,Ph	220-240V,1Ph,50Hz	220-240V,1Ph,50Hz
Cooling Capacity	Rated(Min-Max)	kW	2.63 (0.67-3.97)	3.52 (0.76-4.98)
Heating Capacity	Rated(Min-Max)	kW	3.81 (0.41-5.50)	4.98 (0.45-6.44)
Indoor air flow (Hi/Mi/Lo)		m^3/h	600/510/400	650/580/490
Indoor sound pressure level (Hi)		dB(A)	39.5/36/31/25	40/37.5/31.5/25
Indoor sound power level (Hi)		dB(A)	56	56
Outdoor sound pressure level		dB(A)	54	56
Outdoor sound power level (Hi)		dB(A)	62	63
Indoor unit	Dimension(W×D×H)	mm	794×200×621	794×200×621
	Packing(W×D×H)	mm	865×280×719	865×280×719
	Net/Gross weight	Kg	14.9/18.8	14.9/18.8
Refrigerant piping	Liquid side/Gas side	mm	6.35mm(1/4in)/9.52mm(3/8in)	6.35mm(1/4in)/9.52mm(3/8in)
	Piping OU-IU MAX	m	25	25
	Level difference IU-OU MAX	m	10	10
Qty'per 20' /40' /40'HQ		Indoor unit	168/344/390	168/344/390
Qty'per 20' /40' /40'HQ		Outdoor unit	132/264/352	99/198/198

FN Floor Standing

Standard Features

Optional Features

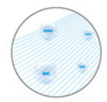

Air Magic Ionizer

Wireless Remote Controller

The following remote controls correspond to the Comfort Perfectionist, Versatile Cassette and Super Slim Cassette from left to right.

RG10N3(2HS)/BGEF RG10A5(B)BGEF RG10F(B)/BGEF

Innovative 3WD Air Outlet

The "3WD Air Outlet" technology provides air from three directions for comprehensive coverage and faster cooling, unlike traditional single-direction air conditioners.

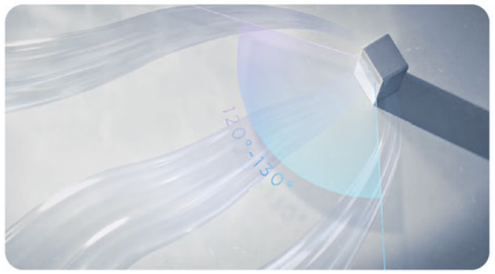

Innovative 3WD Air Inlet

Traditional floor-standing air conditioners only have air inlets on the front or sides. In contrast, the Innovative 3WD Air Inlet enables air to enter from three directions-left, middle and right, effectively increasing the air intake volume of the air conditioner and thus enhancing its cooling and heating performance.

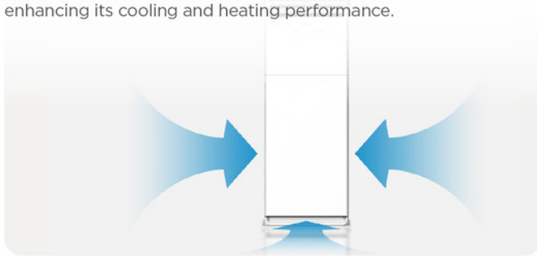

Wide Wind (Guest) Mode

When operating at 80% of the wind speed, the air conditioner can achieve a 24.8% temperature drop within 20 minutes. Compared with the GA floor-standing air conditioner, the cooling range has increased by 26.9%.

* When the Wide Wind (Guest) Mode is turned on, the front air deflector blows air downward and the side air deflectors start to swing to distribute the air.

Turbojet Engine System

Through the optimization of the air ducts in the inner core of the air conditioner body and the design of 3WD Air Outlet/Inlet, the following has been achieved:

- The air conditioner has changed from single-sided air outlet to three-sided air outlet, with the area of the air outlet increased by 53%.
- It can achieve an ultra-long air supply distance of 25 meters. Compared with traditional floor-standing air conditioners, the air supply distance has been increased by 67%.
- It has an ultra-large air volume of 2,311m³/h. The circulating air volume has been increased by 19.4% compared with that of traditional floor-standing air conditioners.

Healthy Management

Thanks to the multi-cleaning tech and design for both the indoor and outdoor units, we ensure all-round health for air and the AC. Your family can breathe fresher air, and the AC lasts longer.

I-Clean Mode

AC self-cleaning: Reclean the AC, Refresh your breath.
Midea Inverter AC has been upgraded from water washing (20 mins) to frost cleaning (42 mins), which can remove more dust and bacteria, keeping the AC clean and performing well.

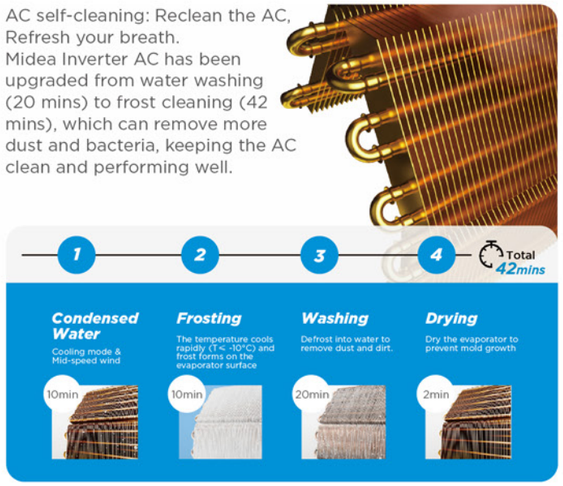

Air Magic Ionizer(optional)

- Built in the air-outlet of indoor unit, the Super Ionizer generate positive and negative ions, which improves the fitness for users.
- Furthermore, this device also functions effectively in deodorizing, eliminating dust, smoke and pollen particles, bring more fresh air for the users.

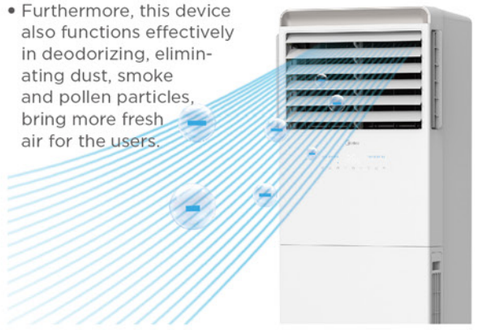

Easy-Remove & Wash Filter

Compared with before when the panel had to be removed for filter cleaning, the FN AC only needs a "one-pull-one-lift" in 1 second to disassemble the filter, making it more time-saving and worry-free.

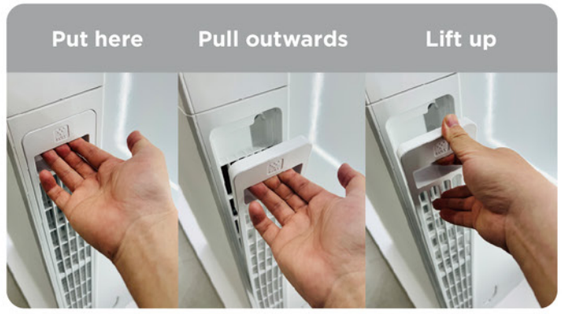

Auto Restart

In the event of a sudden power failure, air conditioner restarts automatically and will operate based on the previous setting.

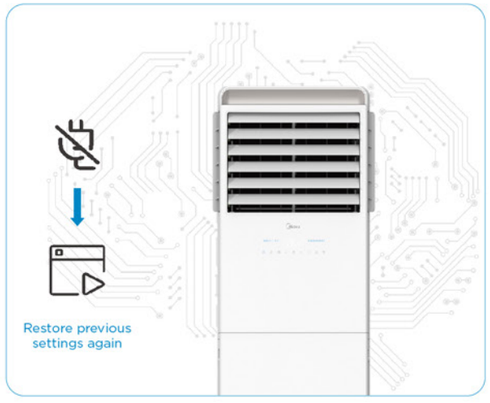

Smart WiFi Control Wherever You Are

Simply download the MSmartHome app to control your air conditioner at anytime and from anywhere for ultimate convenience and peace of mind.

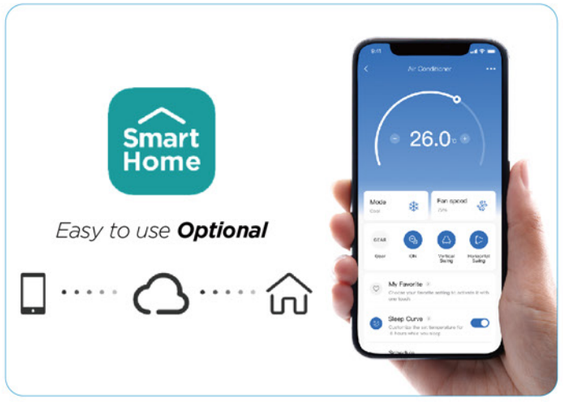

M Floor Standing

Feature

Wireless Remote Controller

The following remote controls correspond to the Comfort Perfectionist, Versatile Cassette and Super Slim Cassette from left to right.

RG10N3(2HS)/BGEF RG10A5(B)BGEF RG10F(B)/BGEF

Wind Avoid Me

With one tap of button, the airflow direction is automatically adjusted to the maximum angle to prevent direct cold/hot drafts.

Touch Control

The control buttons are embed into the body so that the unit can be controlled with only a gentle touch.

Auto Restart

In the event of a sudden power failure, air conditioner restarts automatically and will operate based on the previous setting.

Self-Diagnosis & Auto-Protection

In the case of abnormal operation, the unit will protect the system by shutting down automatically. Meanwhile the error code enables engineers to identify the problem quickly.

Flexible Placement

The cabinet air conditioner can be placed flexibly according to the room layout, does not take up too much space, and has strong adaptability.

Timer

With the wired controller, users can set the air conditioner to turn on or turn off within a 24-hour period, with a minimal interval of 0.5 hour.

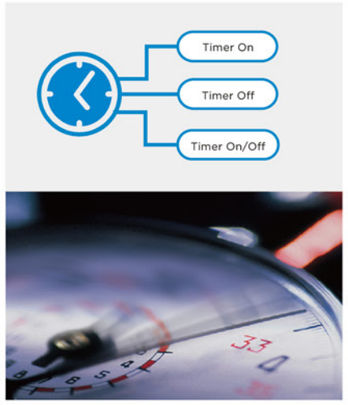

Indoor			MFM-48HRFN8-QRD0W	MFM-48HRFN8-QRD0W	MFM-55HRFN8-QRD0W
Outdoor			MOX630U-48HFN8-QRD0W(GA)	MOX630U-48HFN8-RRD0W(GA)	MOX630U-55HFN8-RRD0W(GA)
Seasonal Cooling	Pdesignc	kW	14.1	14.1	15.5
	SEER	W/W	5.9	5.7	5.7
	Energy Efficiency Class		A+	A+	A+
	Seasonal space cooling energy efficiency(ηs,c)	%	233	225	225
Heating (Average)	Pdesignh	kW	11.3	11.4	12.1
	SCOP	W/W	4.0	3.8	3.8
	Energy Efficiency Class		A+	A	A
	Seasonal space heating energy efficiency(ηs,h)	%	157	149	149
Heating (Warmer)	Pdesignh	kW	11.7	11.8	11.7
	SCOP	W/W	4.3	4.3	5.0
	Energy Efficiency Class		A+	A+	A++
	Seasonal space heating energy efficiency(ηs,h)	%	169	169	197
Power supply (Indoor)		V,Hz,Ph	220-240V,1Ph,50Hz	220-240V,1Ph,50Hz	220-240V,1Ph,50Hz
Power supply (Outdoor)		V,Hz,Ph	220-240V,1Ph,50Hz	380-415V,3Ph,50Hz	380-415V,3Ph,50Hz
Cooling Capacity	Rated(Min-Max)	kW	14(3.5-15.2)	14(3.5-15.2)	15.2(4.1-16.1)
Heating Capacity	Rated(Min-Max)	kW	15.5(4.1-17.6)	15.54.1-17.6)	18.1(4.4-18.8)
Indoor air flow (Hi/Mi/Lo)		m^3/h	2080/1910/1745	2080/1910/1745	1950/1750/1600
Indoor sound pressure level (Hi)		dB(A)	53.5/51.5/49.5/41	53.5/51/49/40.5	53/50.5/45.5/40
Indoor sound power level (Hi)		dB(A)	66	66	65
Outdoor sound pressure level(Hi) (1.0m)		dB(A)	64	64.5	64
Outdoor sound pressure level(Hi) (1.5m)		dB(A)	58.5	60	61
Outdoor sound power level (Hi)		dB(A)	73	73	74
Indoor unit	Dimension(W×D×H)	mm	600×455×1934	600×455×1934	600×455×1934
	Packing(W×D×H)	mm	2080×755×585	2080×755×585	2080×755×585
	Net/Gross weight	Kg	58.6/77.5	58.6/77.5	61.4/80.0
Refrigerant piping	Liquid side/Gas side	mm(inch)	9.52mm(3/8in)/15.9mm(5/8in)	9.52mm(3/8in)/15.9mm(5/8in)	9.52mm(3/8in)/15.9mm(5/8in)
Qty'per 20' /40' /40'HQ		Indoor unit	32/68/68	32/68/68	54/108/120
Qty'per 20' /40' /40'HQ		Outdoor unit	44/96/96	44/96/96	44/96/96

Outdoor Unit

X2 Appearance

X3 Appearance

X6 Appearance

X4 Appearance

D30 Appearance

Outdoor unit size

The outdoor units for the 48K & 55k Btu/h models have been completely redesigned. Easier installation is achieved for this compact and lightweight outdoor unit.

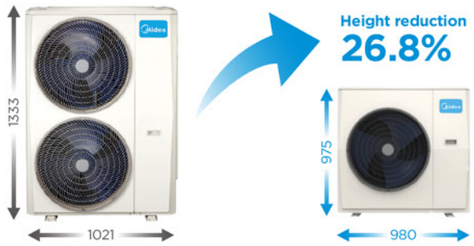

Rotation: Intelligent Dusting Switch

After turning off the AC, the fan blade of the outdoor unit will automatically rotate in reverse to get rid of the sand and dust for keeping the AC clean.

1-phase DC inverter outdoor unit only.

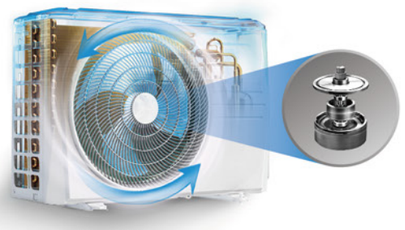

Reliable PCB with UV Conformal Coating & Anti-sulfurated Resistors

The enhanced PCB is covered with up to 100 Qm UV conformal coating, enjoying 2X thicker and higher density protection.
Additionally, the PCB applies anti-sulfrated resistors, thus further improving reliability in environments with a high sulfur content.

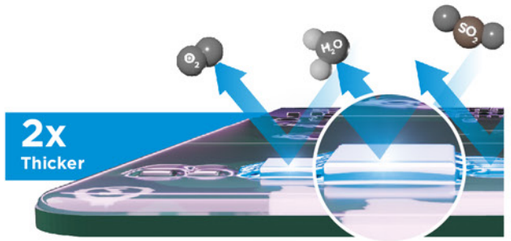

Corrosion Area
<0.02%[1]

Rating Number
9.8[2]

Verified by intertek
Total Quality. Assured.

[1]Depended on the using industrial environment with salt contamination (Ref. ISO 21207: 2015, Annex A, test method B, JIS Z 2371:2015 Annex JC)
[2]The full rating number is 10.
[3]This function is available for 4th generation electronic system.

Midea Exclusive Anti-Aging Technology Test

After 240 hour UV test and 72 hour neutral salt spray (fog) test

HYPER GRAPFINS

0.02% corrosion area*2

5Xmore
corrosion resistance
than golden coating

Verified by intertek
Total Quality. Assured.

*2 Midea exclusive anti-aging technology, Ref.test standard is QMK-J037.1021-2019 hydrophilic aluminum foil

HEAT PUMP WATER HEATER

03

Product overview HEAT PUMP WATER HEATER					Water Tank Volume Class						
Type	Product name	Appearance	Page	Features	80L	100L	150L	181L	185L	270L	275L
Wall-mounted Combo Heat Pump Water Heater (HPWH)	RSJ		69	• Energy saving, A+ energy efficiency with smart grid connection available, money saving and eco-friendly. • Compact design with wall-mounted installation, can be installed inside a cabinet to save indoor space. • Microchannel heat transfer technology increases the contact surface between the heat exchanger and the water tank, enhancing heat exchange efficiency with a porous parallel flow design. • More Durable: Equipped with a titanium anode, ensuring full corrosion protection and extending the inner tank's service life; 45mm insulation layer reduces wall thermal losses. • More precise water temperature control: Dual temperature sensor design and More balanced water temperature.	●	●	●				
Floor-standing Combo Heat Pump Water Heater (HPWH)	EU-RSJ		71	• Energy saving, A+ energy efficiency with smart grid connection available, money saving and eco-friendly. • Microchannel heat transfer technology increases the contact surface between the heat exchanger and the water tank, enhancing heat exchange efficiency with a porous parallel flow design. • Photovoltaic (PV) ready: The combo unit connects to PV systems, using free green energy to trigger the heating process. • More Durable: Equipped with a titanium anode, ensuring full corrosion protection and extending the inner tank's service life; 45mm insulation layer reduces wall thermal losses. • More precise water temperature control: Dual temperature sensor design and More balanced water temperature.				●	●	●	●

Note : The Floor-standing Combo Heat Pump Water Heater series tank specifications 181L and 270L come with Solar Coil.

Wall-mounted Combo Heat Pump Water Heater (HPWH)

Feature

Auto-defrost
Timer settings
Power-off Memory
Self-diagnosis
Engineering Mode
Smart Grid

Appearance

High Efficiency

EUROMONITOR INTERNATIONAL

MIDEA HAS SOLD MORE THAN 6.2 MILLION SETS OF R290 PRODUCTS

We are committed to promoting our innovative R290 products everywhere to ensure a sustainable future.

Energy saving

A+ energy efficiency with smart grid connection available, money saving and eco-friendly.

Environmental-friendly

R290 refrigerant is used in this new heat pump water heater, which has no negative impact on the ozone layer.

Microchannel heat transfer technology

The contact surface between the heat exchanger and the water tank is increased, therefore the heat exchange effect is improved; Porous parallel flow design, higher heat transfer efficiency under the same heat transfer area.

Multi-loop flat tube design reduces refrigerant charge

Enhanced surface with parallel flow design effectively increases heat transfer efficiency

High strength design, pressure tested to 90 kg, increased reliability

High performance thermal conductive silicone grease significantly improves heat transfer efficiency

Coil heating at the bottom of the water tank

The bottom of the tank is heated by coils and the body is heated by a microchannel heat exchanger, which allows for high tank volume utilization and a higher hot water output rate.

More Durable

Equipped with titianium impressed current anode, achieving corrosion protection throughout the entire life cycle of the inner tank and extending the service life.

Thick insulation layer

45mm insulation layer for low thermal losses through the wall

Enamelled water tank

High impact strength
More than 100 thousand of impact tests

Strong corrosion resistance
500 hours corrosion resistance test, equipped with magnesium anode

High absorption capacity
Tank coating materials from international famous brand FERRO,adheres to the tank tightly

High pressure resistance
Dedicated steel helps ensuring the strength under pressure

Top manufacturing technology
International cutting-edge enamel manufacturing process by German famous EISENMAN professional production line

More Convenient,More Healthy

The new R290 product has a variety of operating modes to suit all your needs.

Disinfection function

The disinfection function is used to eliminate legionella by 60-70°C to ensure health and safety. This function can be activated by the user interface.

Running frequency	7 days
Start time	23:00

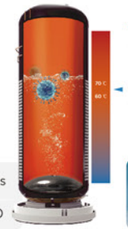

Vacation mode

Vacation mode allows you to set the operation during your holiday. At the end of the holiday time, the unit will automatically enter disinfection mode and resumes previous settings from before entering vacation mode.

Ventilation function (optional)

Strengthen indoor air circulation for fresher air.

Bringing fresh outdoor air to the indoor

Exhausting dirty indoor air to the outdoor

Enhanced Comfort

More precise water temperature control

Dual temperature sensor design

Real-time sensing of inlet and outlet water temperatures

More balanced water temperature

Low inlet laminar water addition technology for more usable water volume

MORE DURABLE

Midea R290 Heat PUMP Water Heater

Model			RSJ-08/80RDN7-B1		RSJ-09/100RDN7-B1		RSJ-09/150RDN7-B1	
Running models			Heat pump	E-heater	Heat pump	E-heater	Heat pump	E-heater
Running ambient temp		°C	0~43 -7~43 for models with air inlet duct	0~43 -20~45 for models with air inlet duct	0~43 -7~43 for models with air inlet duct	0~43 -20~45 for models with air inlet duct	0~43 -7~43 for models with air inlet duct	0~43 -20~45 for models with air inlet duct
Outwater Temp		°C	Default 50°C,38°C~65°C(70)		Default 50°C,38°C~65°C(70)		Default 50°C,38°C~65°C(70)	
Power supply		Ph-V-Hz	1-220~240-50		1-220~240-50		1-220~240-50	
Storage size		Ltr	78		98		145	
RATED INPUT		W	1950		1950		2250	
RESISTANCE CLASS			IP21		IP21		IP21	
Water heating	Capacity (A15/12°C, W15-45°C)	kW	0.95	1.50	0.98	1.50	1.30	1.50
	η		112%	/	111%	/	122%	/
	scf		0.1	/	0.1	/	0.09	/
	energy class		A+		A+		A+	
	Max. current	A	9.0		9.0		10.5	
Unit	Dimension (D×H)	mm	Φ500×548×1196		Φ500×548×1360		Φ500×548×1707	
	Packing (W×H×D)	mm	620×1295×585		620×1450×585		620×1785×585	
	Net/gross weight	kg	57/63		62/68		80/87	
Sound power level (without duct)		dB(A)	54		54		56	
Refrigerant type/quantity		kg	R290/0.15		R290/0.15		R290/0.15	
Refrigerant design pressure		MPa	3.0/1.2		3.0/1.2		3.0/1.2	
Water system	Water inlet pipe	mm	DN15		DN15		DN15	
	Water outlet pipe	mm	DN15		DN15		DN15	
	Drainage pipe	mm	DN12		DN12		DN12	
	Max. pressure	MPa	0.80		0.80		0.80	
Water Side Heat exchanger			Microchannel heat exchanger		Microchannel heat exchanger		Microchannel heat exchanger	
E-heater		kW	1.5×1		1.5×1		1.5×1	
Mixed water at 40°C V40		L	85		110		160	
Qty'per 20' /40' /40'HQ (Without pallet)		Pcs	30/60/120		30/60/60		30/60/60	
Qty'per 20' /40' /40'HQ (With pallet)		Pcs	30/60/60		30/60/60		30/60/60	

Remark: The specification may be changed for product improvement, please refer to the nameplate.

Floor-standing Combo Heat Pump Water Heater (HPWH)

Feature

Energy Saving · Environmentally friendly · More Durable · More Convenient · Daily Timer

Smart App Control · Easy Installation · Easy Maintenance · Weekly Timer

Appearance

High Efficiency

EUROMONITOR INTERNATIONAL

MIDEA HAS SOLD MORE THAN 6.2 MILLION SETS OF R290 PRODUCTS

We are committed to promoting our innovative R290 products everywhere to ensure a sustainable future.

Energy saving

A+ energy efficiency with smart grid connection available, money saving and eco-friendly.

Environmental-friendly

R290 refrigerant is used in this new heat pump water heater, which has no negative impact on the ozone layer.

Microchannel heat transfer technology

The contact surface between the heat exchanger and the water tank is increased, therefore the heat exchange effect is improved; Porous parallel flow design, higher heat transfer efficiency under the same heat transfer area.

Multi-loop flat tube design reduces refrigerant charge

Enhanced surface with parallel flow design effectively increases heat transfer efficiency

High strength design, pressure tested to 90 kg, increased reliability

High performance thermal conductive silicone grease significantly improves heat transfer efficiency

Solar thermal integration with internal coil

Heat exchanger coil application in the lower temperature zone of the unit.

Free hot water, save running cost

Absorbing and converting of energy directly from the sun increases the energy efficiency and helps save costs.

Reducing the heat-up time

Reducing heat-up time by enhancing the heating capacity of the unit.

Multiple applications

Several connection options to adapt different system configurations. Also ready to connect to an external heating source (boiler, ATW) for more comfort.

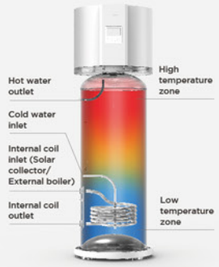

Multiple applications

Solar collector

Can be connected to solar collector. The heat of the sun is collected to heat up the water in the tank with the aid of an internal coil.

External boiler

Can be connected to an external boiler as a powerful auxiliary heat source.

Photovoltaic（PV）ready

The Combo unit can be connected to photovoltaic systems; a signal from the PV system can trigger the heating process using this free green energy to power the Combo unit.

More Durable

Equipped with titianium impressed current anode, achieving corrosion protection throughout the entire life cycle of the inner tank and extending the service life.

Impressed current anode (Optional)

Equipped with both Impressed current anode and magnesium rod anti-corrosion technologies, the product guarantees full life cycle corrosion protection of the inner tank, regardless of whether it is powered on or off.*

Free of anode changing · Reduce maintenance cost · More reliable protection

*Magnesium rod should be replaced if unit spends periods turn off.

Thick insulation layer

45mm insulation layer for low thermal losses through the wall

Enamelled water tank

- **High impact strength** — More than 100 thousand of impact tests
- **Strong corrosion resistance** — 500 hours corrosion resistance test, equipped with magnesium anode
- **High absorption capacity** — Tank coating materials from international famous brand FERRO,adheres to the tank tightly
- **High pressure resistance** — Dedicated steel helps ensuring the strength under pressure
- **Top manufacturing technology** — International cutting-edge enamel manufacturing process by German famous EISENMAN professional production line

Enhanced Comfort

More precise water temperature control

Dual temperature sensor design

Real-time sensing of inlet and outlet water temperatures

More balanced water temperature

Low inlet laminar water addition technology for more usable water volume

More Convenient,More Healthy

The new R290 product has a variety of operating modes to suit all your needs.

Disinfection function

The disinfection function is used to eliminate legionella by 60-70°C to ensure health and safety. This function can be activated by the user interface.

Running frequency	7 days
Start time	23:00

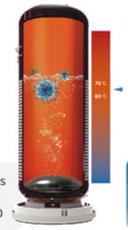

Vacation mode

Vacation mode allows you to set the operation during your holiday. At the end of the holiday time, the unit will automatically enter disinfection mode and resumes previous settings from before entering vacation mode.

Ventilation function (optional)

Strengthen indoor air circulation for fresher air.

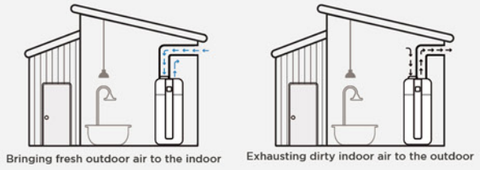

Reduced Transportation Costs

Lay-down transportation:

The Combo can be laid down for a short period time, allowing it to be transported the last kilometre by van.

Double pile stacking allowed:

Reinforced head design, reinforced packaging design.

Smart Control , Smart Life

Operate your R290 water heater from almost anywhere, at any time through one click on SmartHome APP. With the SMART function, it can also learn and adapt to users' usage habits.

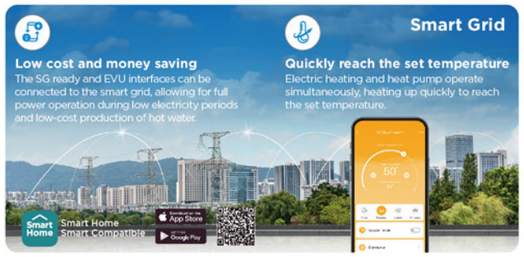

APP (Implementation)

Timer · Mode selection · Child Lock · Auto restart · Notification, query and detection of faults

Display Panel

Remote Firmware Update

When firmware update is available, the APP will receive a notification and the user canchoose whether or not to make the update.

Easy Installation and Maintenance

Special air inlet/outlet design, fits well for the installations inside room (for EU models)

In the garage

In the basement

In the storage room

Magnesium rod is easy to maintain

Open the bottom service cover to replace the magnesium rod, which is easy to operate.

Front side maintenance

The electronic control, compressor, valve body most of the components are accessible from the front, so it is only necessary to remove the front of the cover for easy maintenance.

Easy fan maintenance

If necessary, the fan can be easily accessed and disassembled. The upper housing, motor and impeller are removed as a block from the lower housing, giving access to all components of the fan.

Floor-standing Combo Heat Pump Water Heater (HPWH)

Model			EU-RSJ-15/185RDN7-L1	EU-RSJ-15/181RDB10N7-L1	EU-RSJ-15/275RDN7-L1	EU-RSJ-15/270RDB10N7-L1
Power supply		Ph-V-Hz	1-220～240-50	1-220～240-50	1-220～240-50	1-220～240-50
Storage size		Ltr	185	181	275	270
Data according to EN 16147: 2017 standard for AVERAGE climate (unit in ECO mode, Hot water setpoint = 54 °C; Inlet water = 10 °C; Inlet air temp = 7 °C DB / 6 °C WB) * according to European regulation 812/2013	Load profile	-	L	L	XL	XL
	Water heating energy efficiency class	-	A+	A+	A+	A+
	Water heating energy efficiency - η	%	131.1	130.4	132	128
	COP_{DHW}	-	3.14	3.14	3.25	3.13
	Reference hot water temperature- θ wh	°C	53	53	52	53
	Annual electricity comsuption-AEC	kWh/a	781	785	1267	1312
Running ambient temp	Heat pump	°C	-7～43	-7～43	-7～43	-7～43
	E-heater		-20～46	-20～46	-20～46	-20～46
Maximum inlet water pressure		Mpa	0.7	0.7	0.7	0.7
Net/gross weight		kg	91/112	94/115	123/148	132/160
Dimension (W×H×D)		mm	560×595×1730	560×595×1730	660×695×1895	660×695×1895
Packing (W×H×D)		mm	655×675×1945	655×675×1945	775×745×2110	775×745×2110
MAX.Hot water temperature with heat pump(with electric heater)		°C	65(70)	65(70)	65(70)	65(70)
Tank	Material	-	Enameled steel	Enameled steel	Enameled steel	Enameled steel
	Cathodic protection	-	Mg rod anode / Electronic + Mg anode is optional	Mg rod anode / Electronic + Mg anode is optional	Mg rod anode / Electronic + Mg anode is optional	Mg rod anode / Electronic + Mg anode is optional
	Water inlet pipe	G"	3/4"	3/4"	3/4"	3/4"
	Water outlet pipe	G"	3/4"	3/4"	3/4"	3/4"
	Drainage pipe	G"	3/4"	3/4"	3/4"	3/4"
Electrical data (Heat pump+electric heater)	Maximum heat pump power input	W	600	600	710	710
	E-heater	W	1640	1640	1640	1640
	Maximum power input	W	2240	2240	2350	2350
	Maximum current input	A	10.5	10.5	11.0	11.0
Refrigerant design pressure		MPa	3.0/1.2	3.0/1.2	2.7/1.1	2.7/1.1
Refrigerant ciruit	Compressor	-	Rotary	Rotary	Rotary	Rotary
	Refrigerant	-	R290	R290	R290	R290
	Refrigerant charge	g	150	150	150	150
	Condenser	-	Aluminum tube wound outside tank	Aluminum tube wound outside tank	Aluminum tube wound outside tank	Aluminum tube wound outside tank
Solar coil	Material	-	×	stainless steel	×	stainless steel
	Surface	m^2	×	0.6	×	1.1
	Max pressure	MPa	×	1.0	×	1.0
Qty'per 20' /40' /40'HQ		Pcs	24/54/54	24/54/54	21/45/45	21/45/45

04

GAS BOLIER

Product overview Gas Bolier					Power class						
Type	Product name	Appearance	Page	Features	5.5KW	9KW	11KW	13KW	17.5KW	22KW	26KW
Heat-Stored Electric Boiler	DSFB		77	• Intelligent thermostatic : In DHW mode, connect the Tank to meet the domestic water demand. In CH mode, accomplish Underfloor heating and Radiator heating • Thermostatic control : Real-time induction of inlet water temperature, intelligent power regulation, saving electricity, ensure accurate temperature all the time • Dual-overheat Protection • Double Mode Switch • Anti-scaling Protection • Silence Working : Ultra-low noise working (less than 45dB in sleep mode)always enjoy a stable sleep. • Anti-freezing Protection • Smart Technology : WIFI remote intelligence control by your phone, temperature control at any time.	●	●	●	●	●	●	●

Heat-Stored Electric Bolier

Electric Boilers converts electricity to heat, which can heat domestic water through the tank and can also heat the underfloor heating and radiator directly. Its dual-overheat protection, anti-scaling protection and anti-freezing protection provide you with a safer water-using environment. Its thermostatic control, double mode switching, low working noise and smart technology bring you warmth and comfort.

Intelligent thermostatic system
In DHW mode, connect the Tank to meet the domestic water demand. In CH mode, accomplish Underfloor heating and Radiator heating.

Thermostatic control
Real-time induction of inlet water temperature, intelligent power regulation, saving electricity, ensure accurate temperature all the time.

Dual-overheat Protection
The heating shell has two temperature controllers and temperature limiters built-in, provide two types(automatic & manual) overheat protection.

Double Mode Switch
There are two modes to switch, active mode and sleep mode, and each mode has a suitable radiator heating temperature and underfloor heating temperature.

Anti-scaling Protection
Cast aluminum heater is used to separate the waterway from the heating body for better anti-scaling effect.

Silence Working
Ultra-low noise working (less than 45dB in sleep mode)always enjoy a stable sleep.

Anti-freezing Protection
When the temperature of outlet or return water is low down 8 °C, the pump will be started. When it is below 5°C, the pump will be started.

Smart Technology
WIFI remote intelligence control by your phone, temperature control at any time.

Heat-Stored Electric Boiler

Model name	DSFB55BE	DSFB90BE	DSFB110BE	DSFB130BE	DSFB175BE	DSFB220BE	DSFB260BE
Rated Power(V)	380-415V 3N-	380-415V 3N-	380-415V 3N-	380-415V 3N-	380-415V 3N-	380-415V 3N-	380-415V 3N-
Rated power (kW)	5.5	9	11	13	17.5	22	26
Rated current (A)	23.9	39.1	47.8	56.5	25.4	31.9	37.7
Sectional area of conductors (mm^2)	4	6	10	10	6	6	6
Working water pressure (MPa)	0.05-0.3	0.05-0 3	0.05-0.3	0.05-0.3	0.05-0 3	0.05-0.3	0.05-0.3
Temperature of heating radiator(°C)	30-85	30-85	30-85	30-85	30-85	30-85	30-85
Temperature of floor heating (°C)	30-60	30-60	30-60	30-60	30-60	30-60	30-60
Default of differential temperature between startup and shutdown in the mode of heatsink(°C)	15	15	15	15	15	15	15
Default of differential temperature between startup and shutdown in the mode of floor heating (°C)	8	8	8	8	8	8	8
Class I freeze-proofing startup temperature (°C)	8	8	8	8	8	8	8
Class II freeze-proofing startup temperature (°C)	5	5	5	5	5	5	5
Temperature of temperature limiter(°C)	120	120	120	120	120	120	120
Temperature of thermostat (°C)	95	95	95	95	95	95	95
Square numbers of heating (m^2)	40	60	80	100	120	140	160
Product dimensions (mm)	600×390×236						
Product packaging dimension (mm)	704×478×328						
Accessary	Plastic expansion tube×2,expansion bolt×1,self-tapping screw×1						
Power cord and Plug	Without						

Control systems

Control systems

Connect with Midea

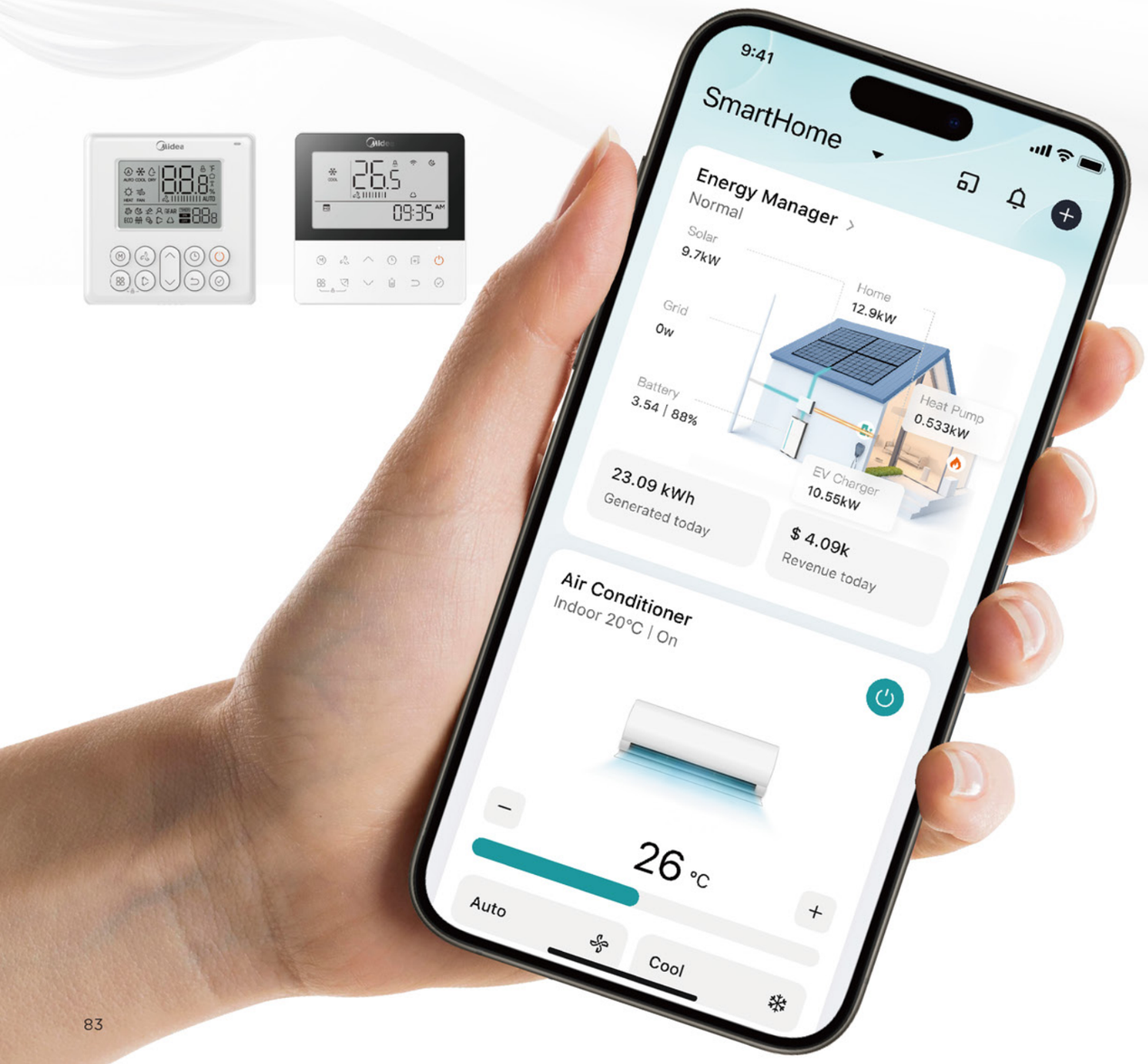

If you are a user or installer it is important you can interact with our systems in the easiest way, from anywhere you are. For any user our interfaces create peace of mind that their system is running in the best possible way.

Depending on the type of user and application Midea develops controls and cloud services to ensure the best experience.

- For home owners it means app and voice control of their home comfort.
- For hotel owners it means easy and stylish personal control for guests, with an integration in hotel booking software for central control.
- For facility managers it means cloud access to all sites, with the possibility to benchmark, optimize performance.
- For installers it means easy transfer of settings during commissioning, remote retrieval of errors and preventive alerts to save time on maintenance or interventions.

Our controls enable you to connect with your customer, save time, improve your comfort intelligently and reduce energy bills.

Catalogue

● standard ○ optional

Individual control systems				BREEZELESS	Oasis Plus	ALL EASY PRO	BREEZELESS E	Solstice	EF4.0	XTREME	Duct	Round Flow Cassette	Round Flow Compact Cassette	One-way Cassette	Ceiling & Floor	Console	Floor standing units	
				MSFA	MSOP	MSEP	MSCB	MSEZ	MSEF	MSAG	MTJ	MCD1	MCA4	MCUTA	MUE	MFA2	MFFN	MFM
																		
Remote Controller	RG51		• Horizonal swing • 8 degree heat • Self-cleaning • Vertical swing	○	○	○	○	●	●	●	○	○	○	○	○	○	●	●
	RG10A		• Horizonal swing • 8 degree heat • Windless • Self-cleaning • Eco mode • Independent swing	○	○	○	●	○	○	○	○	●	●	○	●	●	○	○
	RG10		• Stepless speed • Horizonal swing • 8 degree heat • Independent swing • Display Fahrenheit • Self-cleaning • Eco mode	●	●	●	○	○	○	○	○	○	○	●	○	○	○	○
Wired Remote Controller	120K		• 3.5 In LCD Display Screen • Horizonal swing • Follow me • Vertical swing • Auto-restart • Child lock • Press button • ESP setting • Engineer mode • Infrared signal receiver • Automatic airflow test • 8 degree heat • Self-cleaning	○	○	○	○	○	○	○	●	○	○	○	○	○		
	120M		• 4.3 In LCD Display Screen • Wireless network • Engineering mode setting • Programmable weekly timer • Group control dual control • On-off Button Colored In Red • Touch button • Buzzer on-off state • Error code display • Stepless speed • Infrared signal receiver	○	○	○	○	○	○	○	○	○	○	○	○	○		
Zone Controller	AU-SCP-A07001		• 7 inch colorful touch screen • Up to 16 zones control（2 zone controller） • 2 touch controllers in 1 system • Wi-Fi implanted / APP remote control • Temperature Humidity sensor • Proximity sensor • Favorite settings • Light sensor • Local 7-days schedule • Over the air update • Alexa / Google Assistant ※(OTA) • Apply to A6 / A7※(OTA) product line								○							
Centralized control systems	CCM30		• Max. 64 indoor units group control or individual setting • Clear and bright LCD screen • Backlight • Parameter query • Touch key design • Filter clean reminding • Error code query of each unit • Mode lock, Key lock, Remote controller lock • Permanent schedule setting storage	○	○	○	○	○	○	○	○	○	○	○	○	○		
Centralized control systems	CCM15		• One cloud server can be connected thousands of CCM15. • One user can control many CCM15. • Can check the state of each A/C. • Can control group, area or single A/C. • With the weekly schedule control function. • Can query operation logs and fault records. • Intelligent control.	○	○	○	○	○	○	○	○	○	○	○	○	○		

Control systems

— Wired Remote Controller

1 120K Wired Remote Controller

Wired Remote Controller Wiring Diagram

Connect the wire from the display panel of the indoor unit to a connecting cable .Then connect the other side of the connecting cable to the remote control.

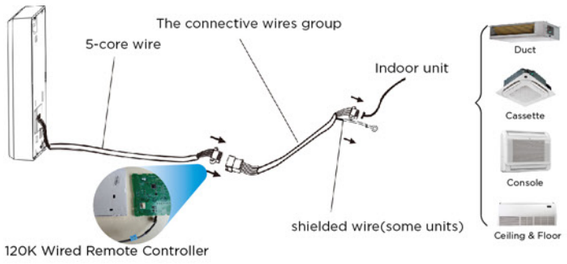

Timer

With the wired controller, users can set the air conditioner to turn on or turn off within a 24-hour period, with a minimal interval of 0.5 hour.

Auto Restart

With auto-restart, the wired controller memorizes mode, fan speed, temperature, on-off, and follow me state. After a power cut, it restarts with previous settings automatically.

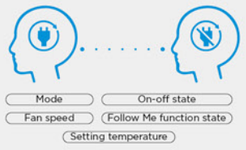

Follow Me

The wired controller enables Follow-Me comfort with a built-in temperature sensor to detect surroundings. The AC adjusts room temperature based on controller feedback for optimal comfort.

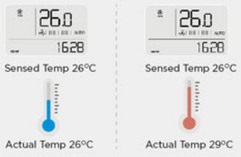

Child Lock

This function can lock the wired controller and prevent erroneous or mischievous setting change. It helps save energy consumption and maintain the same comfort, especially in public spaces like shops, restaurants and offices.

2 120M Wired Remote Controller

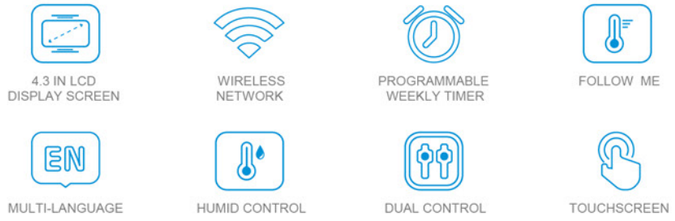

Wiring Diagram

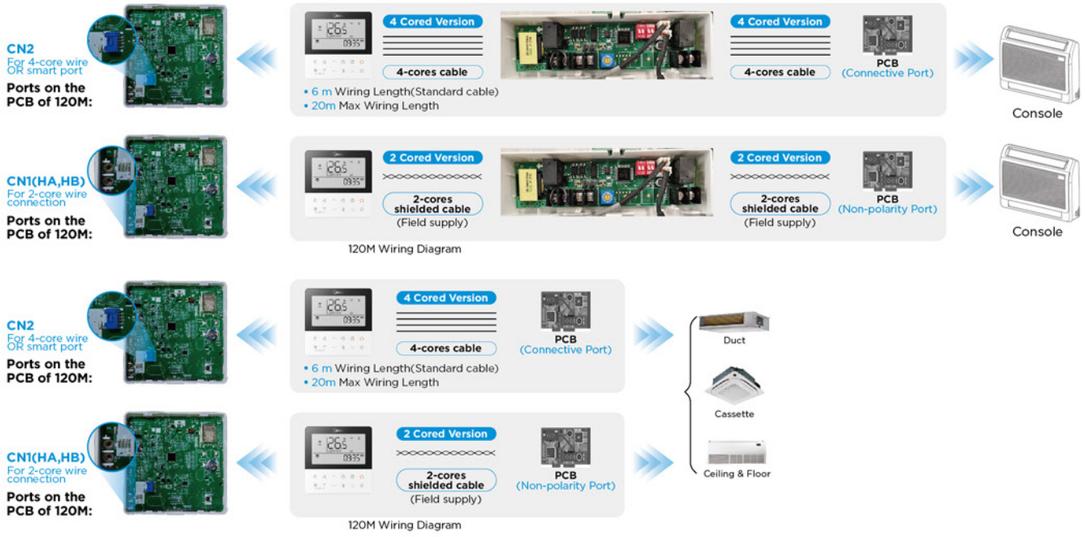

Two control one

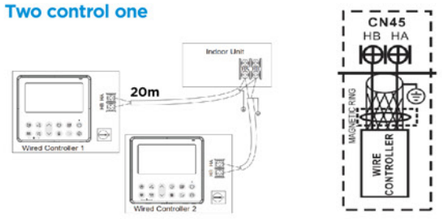

Group control

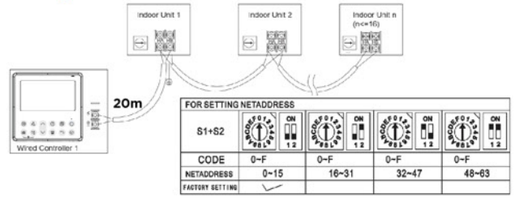

Timer

With the wired controller, users can set the air conditioner to turn on or turn off within a 24-hour period, with a minimal interval of 0.5 hour.

Weekly Timer

Two weekly timer are available, WT1 & WT2. By contrast, WT2 has more choices in setting and manages the air conditioner specifically. They can't be set at the same or with conventional timing function together.

	Sun				Mon...Fri	Sat			
Session	1	2	3	4	... ...	1	2	3	4
Setting	4 different session for 1 day Only switch on/off Setting				... ...	... ...			

Group Control

(The 4-core version is unavailable)

One 120M wired controller can manage up to 16 indoor units, adjusting mode, temperature, and fan speed simultaneously. It simplifies control and ensures uniform temperature in large spaces with one command for all units.

Dual Control

(The 4-core version is unavailable)

Two wired controllers can connect to one air conditioner, allowing adjustments in the living room and preferred modes in the bedroom. Suitable for long-distance settings.

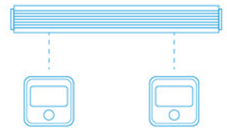

Rotation & Back-up

(The 4-core version is unavailable)

Demanding scenarios like server rooms require consistent temperature control. The 120M wired controller's Rotation & Back-up function ensures optimal operation of air conditioners.

GEAR

The Gear function can change the cooling capacity output of the machine from 50%, 75% to 100% in order to save energy and cope with power fluctuation or limitation.

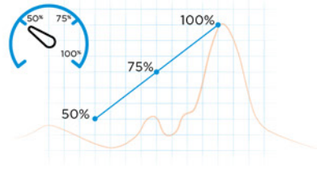

Auto Restart

With auto-restart, the wired controller memorizes mode, fan speed, temperature, on-off, and follow me state. After a power cut, it restarts with previous settings automatically.

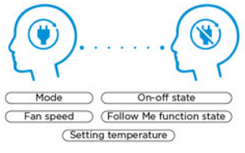

3 RG10 Remote Controller (Dedicated for Duct Indoor Units)

Use the remote control to operate the indoor unit duct by pointing it at the display panel.

Wiring Diagram

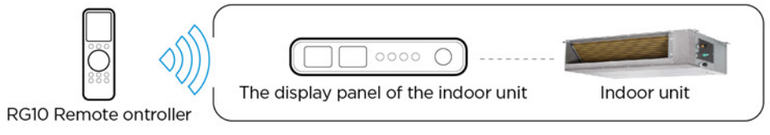

Control systems
— WiFi

Wired Controller

WiFi Control
(For Wired Controller with WiFi function)

WiFi Smart Port

Connection

4-core wires with plug; connected to the reserved socket CN40 on the indoor main PCB

Functions

- WiFi control with smartphone or pad
- APP suitable for both Android and iOS system
- All basic functions
- Senior functions such as weekly timer, customer sleep curve and self-check

Installation Procedure

1 Put the WIFI module into the installation hole.

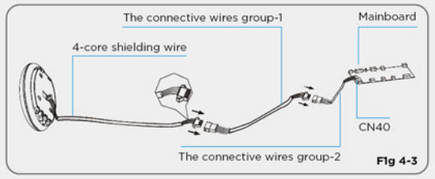

2A Connect the wire to the main PCB of the unit.

2B If you want to use the dual-communication wired controller as well.

Indoor unit

USB WiFi

1 Ports on the PCB of Cassette
2 Extension cord (purchased separately)
3 USB WiFi
4 Put the USB WiFi module into the installation hole
5 Secure the mounting box to the cassette panel

1 Wired Controller with WiFi function 2 WiFi Smart Port Applicable type:Duct、Ceiling & Floor 3 USB WiFi Applicable type: Cassette

Control systems — SmartHome app

The SmartHome App is for those who live their life on the go and who want to manage their Midea system from their smartphone.

One click, full control

Smart control and energy monitor Within your fingertips

- Automatic delivery of periodic energy reports.
- Real time energy savings track.
- Tailor-made energy saving tips.

Smart Home | works with alexa | works with Google Home

Here are some ways for you to download the app:

San the QR code in the User Manual
Select "SmartHome*" in the app store

SmartHome
Download the app & activate product

Download on the App Store
GET IT ON Google Play

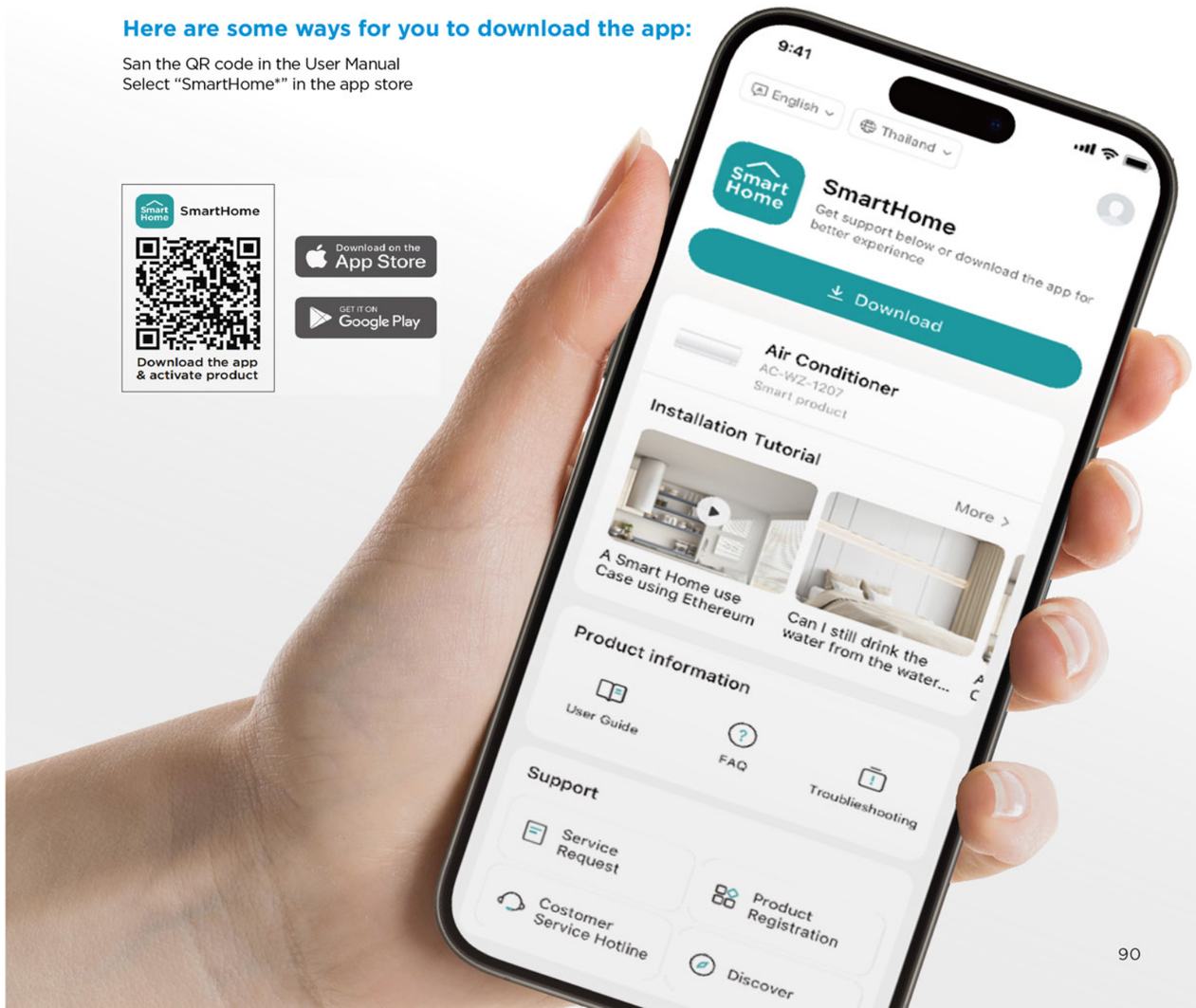

Control systems
— Zone Controller

Touch controller

Zone controller

Sub controller

LED model

Installation guide of zone system

Touch controller

The touch controller use left bucket RJ12 wire to connect with the zone controller. It gets power supply and communicate through the RJ12 wire. (Midea has already provide a 12m length RJ12 left bucket wire inside the touch controller package.)

Zone controller

The zone controller should be installed near to the indoor unit, it needs a power adapter(Provide by Midea) to provide 24V AC power supply, and it can communicate to the indoor unit by using the 4 wires RS485 or 2 wires home bus communication terminal.(It depends on which terminal is supported on the indoor units main board), Midea has already provide a 2m length 2 wires cable on the control box, and a 6m length 4 wires cable separated.

Sub controller

The sub controller use 915MHz wireless RF frequency to communicate with the zone controller, the widest indoor communicate distance should be within 50m (Under different structure of houses, it might be less than 50m).

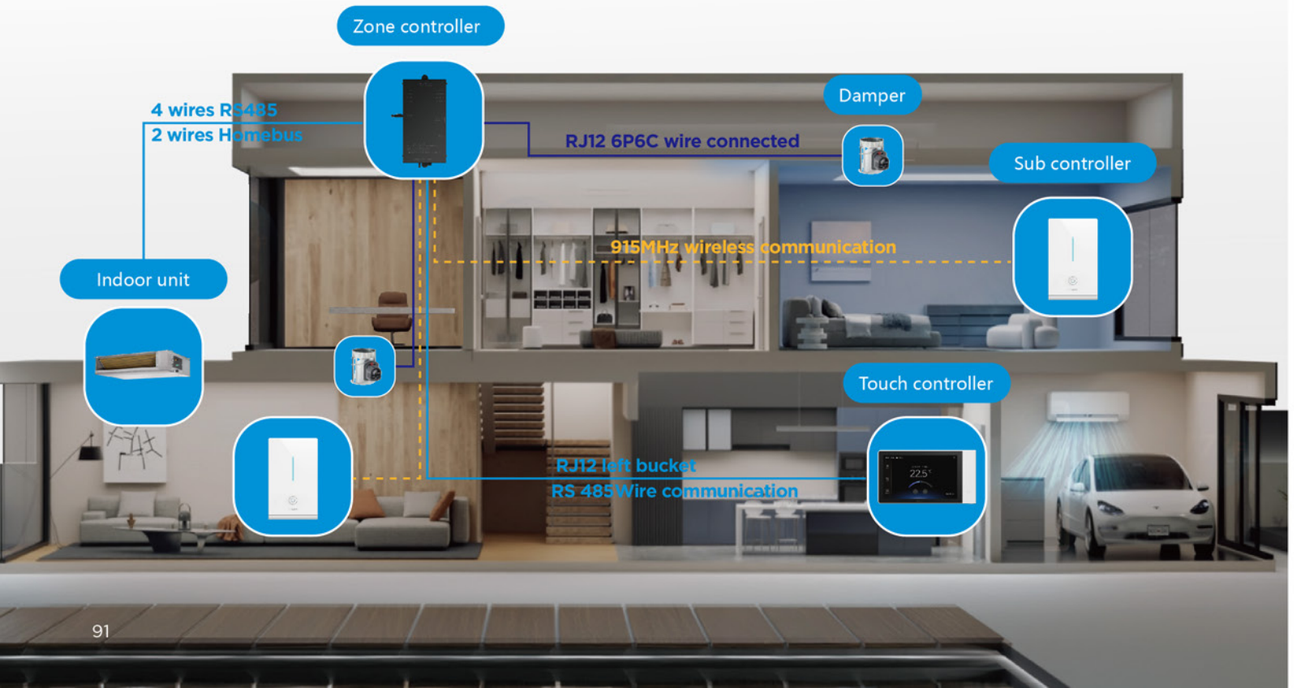

Control systems
— Centralized control systems

CCM30

Functions

- Touch key design
- Filter clean reminding

Wiring diagram of the CCM30

Group Control by PC

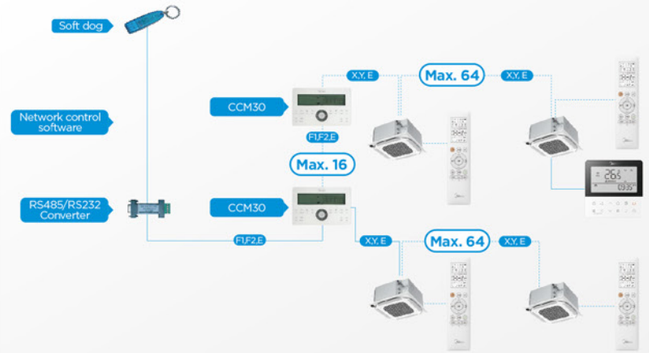

Single Group Controller

NOTE

- Max. 16 CCM30 can be connected with computer.
- A single CCM30 can connect to a maximum of 64 indoor units.
- A single computer can connect to a maximum of 16 64 indoor units.
- The CCM30 has only one port and supports up to 8 refrigerant systems and 64 indoor units.

CCM15

Functions

- Local area network WEB control
- Internet WEB remote control
- Mobile APP remote control
- Mobile WeChat remote control
- Cloud server monitoring, project monitoring, data mining, etc.

The system includes A/C system, data converter, router, cloud server and control terminal. CCM15 can be directly connected with outdoor/indoor units' XYE port. If you want to use the centralized controller CCM30, you can connect to the network bus F1 F2 E of CCM. It can connect up to 64 indoor units.

CCM15 Interface Names

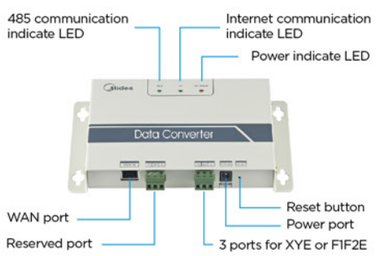

Wiring diagram of the CCM15

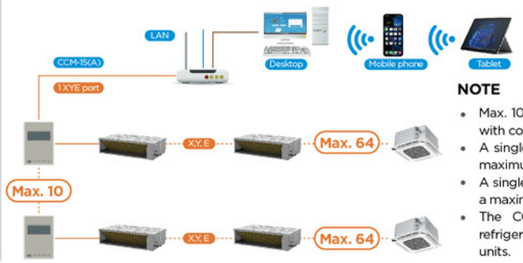

NOTE

- Max. 10 CCM15 can be connected with computer.
- A single CCM15 can connect to a maximum of 64 indoor units.
- A single computer can connect to a maximum of 10 64 indoor units.
- The CCM15 supports up to 8 refrigerant systems and 64 indoor units.

Control systems — BMS Gateways

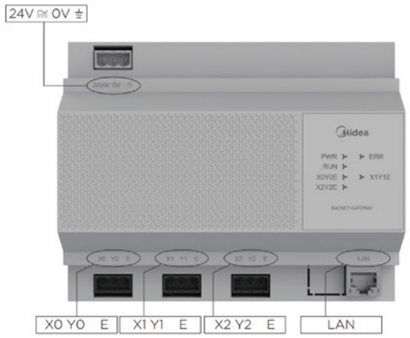

GW-BAC

Key Features

3 XYE ports	Each port can connect maximum 64 IDUs.
Indoor Unit Monitor	Room temperature, Error code, IDU capacity, sensor values , Alarm Indication, On/Off, Mode, Fan Speed, Temperature Setting, Dual Set points, Swing status.
Indoor Unit Control	On/Off, Mode, Fan Speed, Temperature Setting.
Outdoor Unit Control	Emergency Stop.
Network Flexibility	The gateway can be connected to master outdoor units' XYE ports directly.

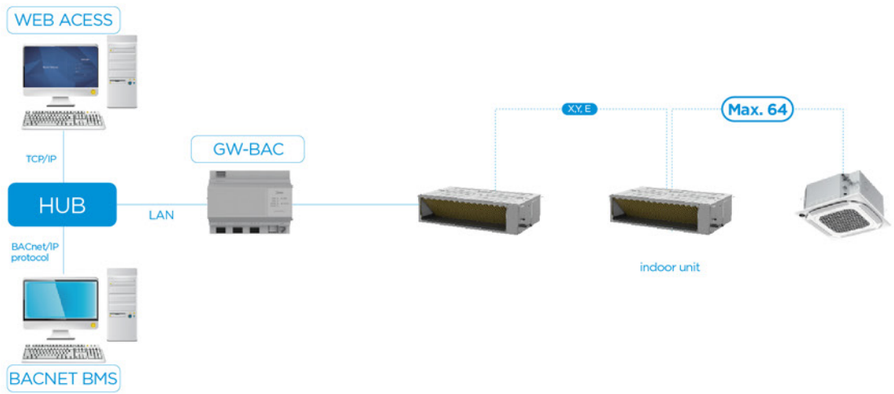

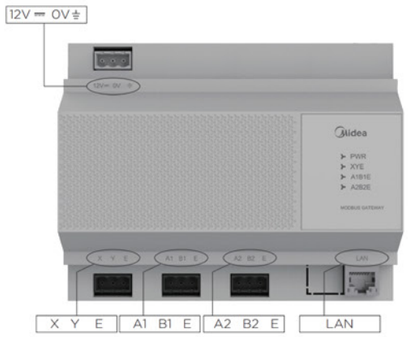

GW-MOD

Key Features

1 XYE ports	Maximum 64 IDUs.
Modbus RTU or Modbus TCP protocol support is available.	
Two types of register addresses	By IDU/ODU address or by IDU/ODU Parameter Type (Continuous Addresses).
Indoor Unit Monitor	On/Off status, Fault status, Online status, Operating mode status, Operating fan speed status, Set Temperature, Indoor Temperature, Error Code, sensor values, IDU capacity.
Indoor Unit Control	All off, On/Off, Mode, Fan Speed, Temperature.
Indoor Unit Control	The gateway can be connected to master outdoor units' XYE ports directly.

Technical drawings

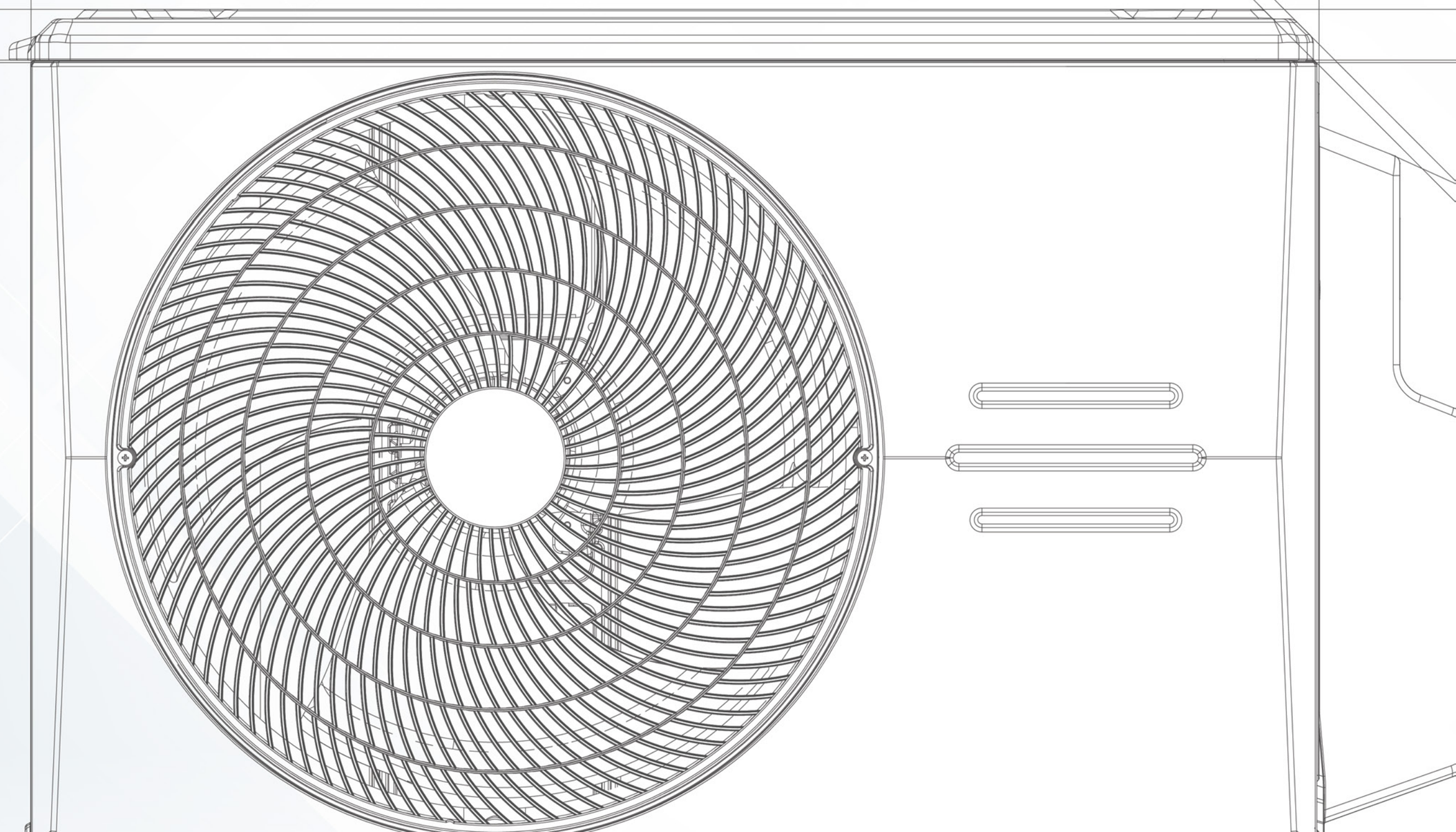

MULTI SPLIT SYSTEM TECHNICAL DRAWINGS

Indoor units + Tank

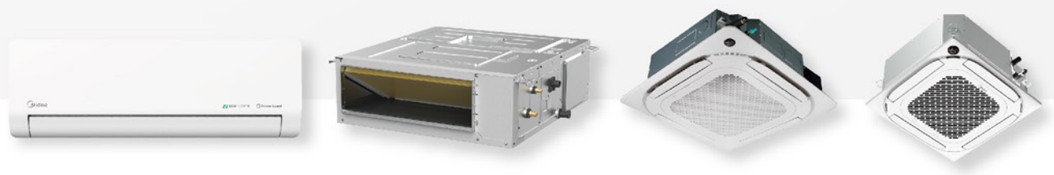

CATALOGUE

Wall-mounted
Duct
Round Flow Cassette
Round Flow Compact Cassette
Ceiling & Floor
Console
One-way Cassette
Tank 100L/190L

BREEZELESS

9K/12K Dimensional Drawings

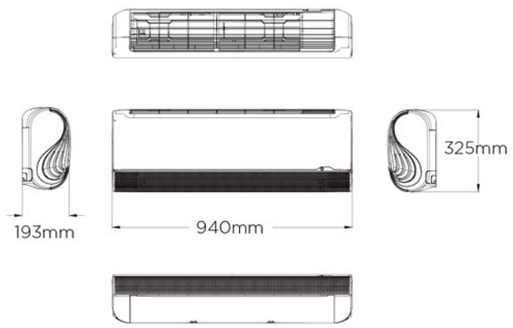

Oasis Plus

9K/12K/18K Dimensional Drawings

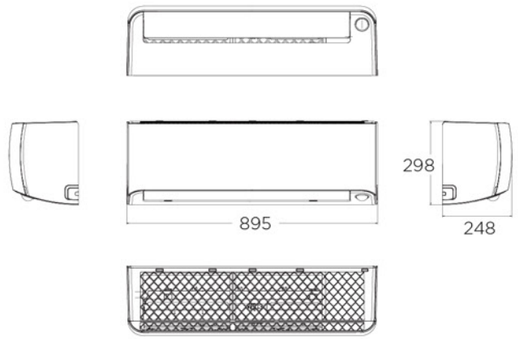

BREEZELESS E

7K/9K/12K Dimensional Drawings

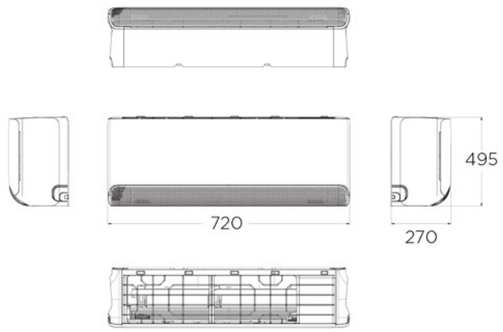

18K Dimensional Drawings

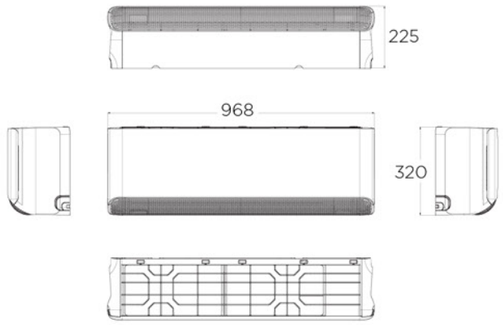

24K Dimensional Drawings

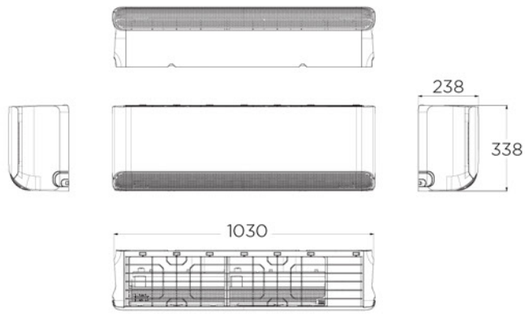

ALL EASY PRO

9K/12K Dimensional Drawings

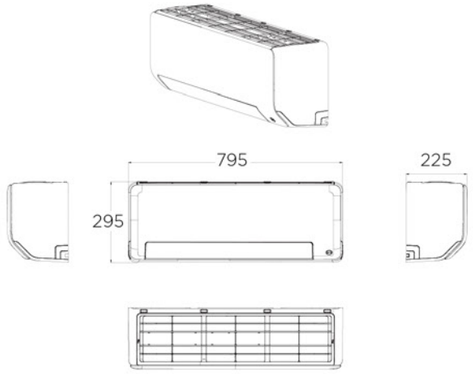

18K Dimensional Drawings

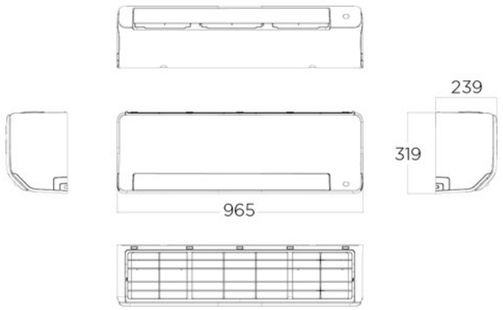

24K Dimensional Drawings

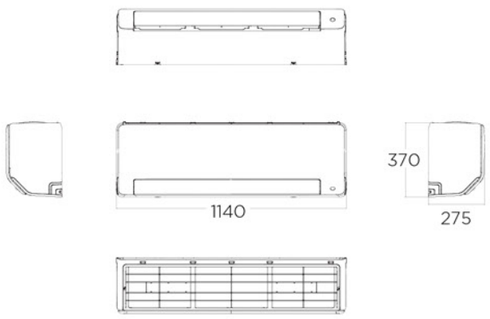

Solstice

9K Dimensional Drawings

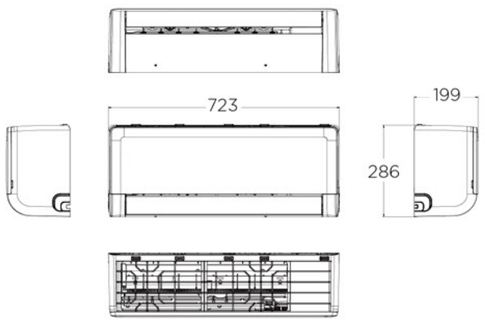

12K Dimensional Drawings

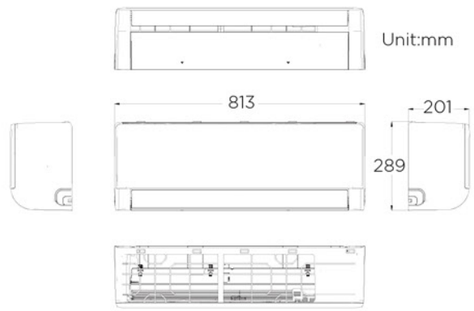

18K Dimensional Drawings

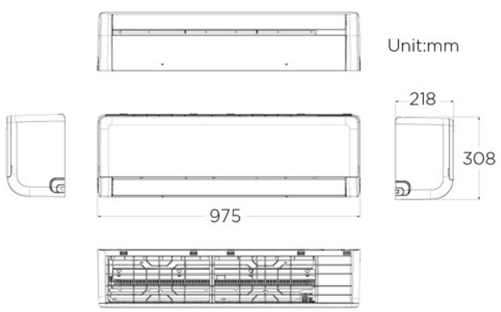

24K Dimensional Drawings

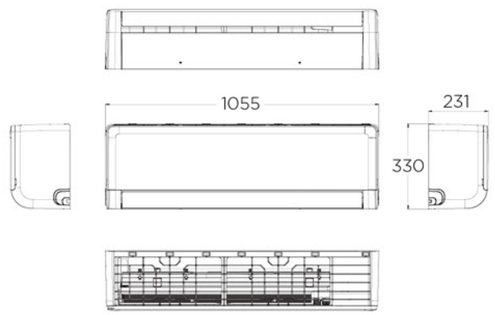

EF 4.0

7K/9K/12K/18K/24K Dimensional Drawings

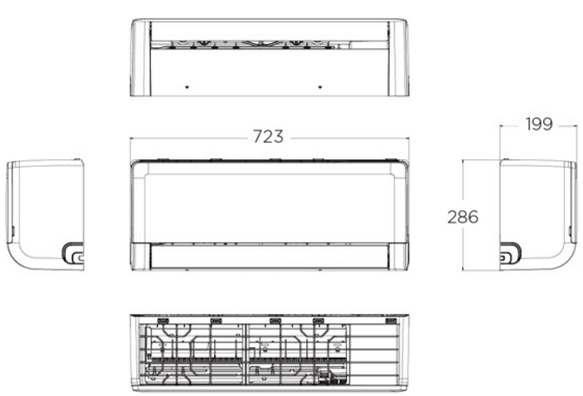

XTREME

Dimensional Drawings

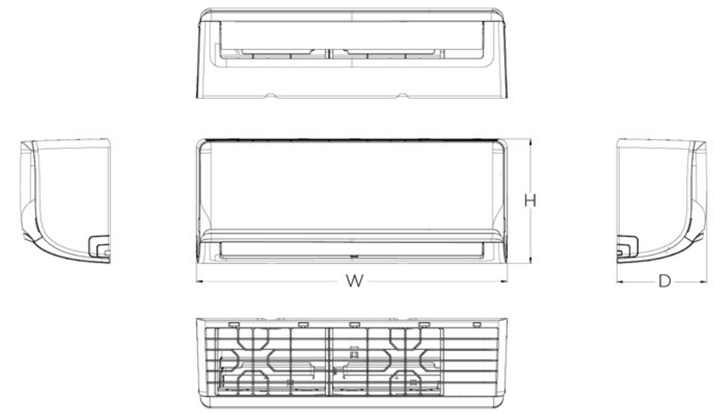

Unit : mm			
Model	W	D	H
MSAGBU-09HRFN8-QRD1GW(GA) MSAGBU-12HRFN8-QRD1GW(GA) MSAGBU-12HRFN8-QRD1GW	835	208	295
MSAGAU-07HRFN8-QRD1GW MSAGAU-09HRFNX-QRD0GW	726	210	291
MSAGAU-09HRFN8-QRD1GW	726	210	291

MSAGBU-12HRFNX-QRD0GW

Dimensional Drawings

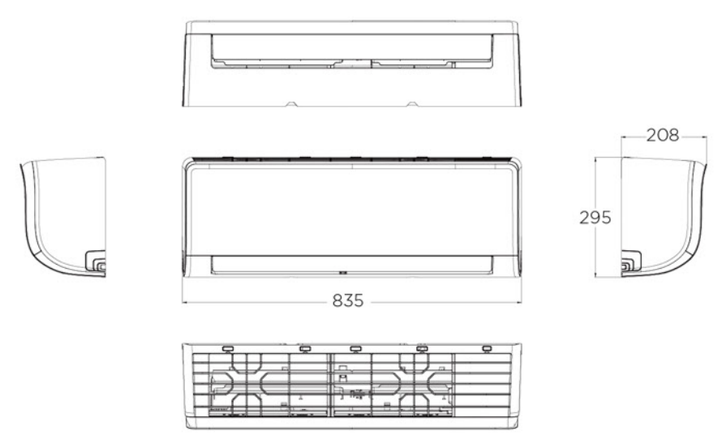

XTREME

MSAGCU-18HRFNX-QRD0GW
Dimensional Drawings

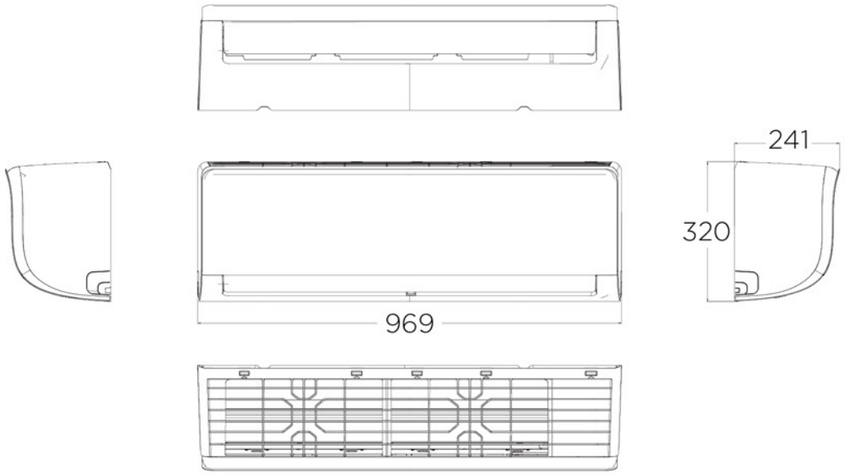

MSAGDU-24HRFN8-QRD0GW
Dimensional Drawings

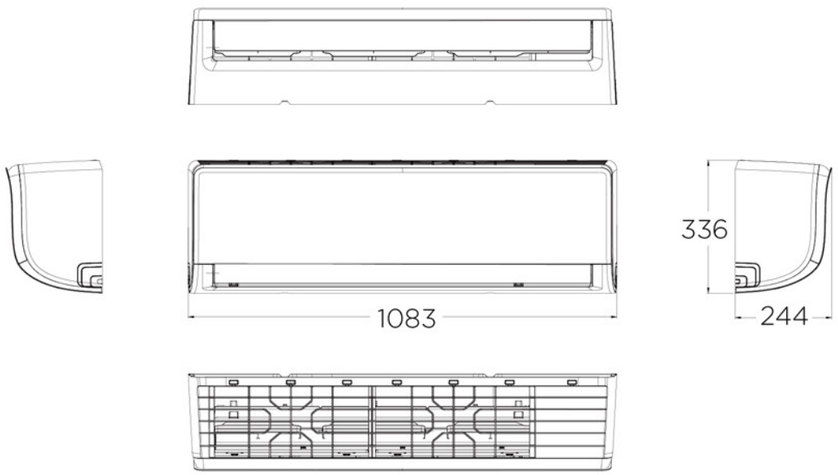

Installation place

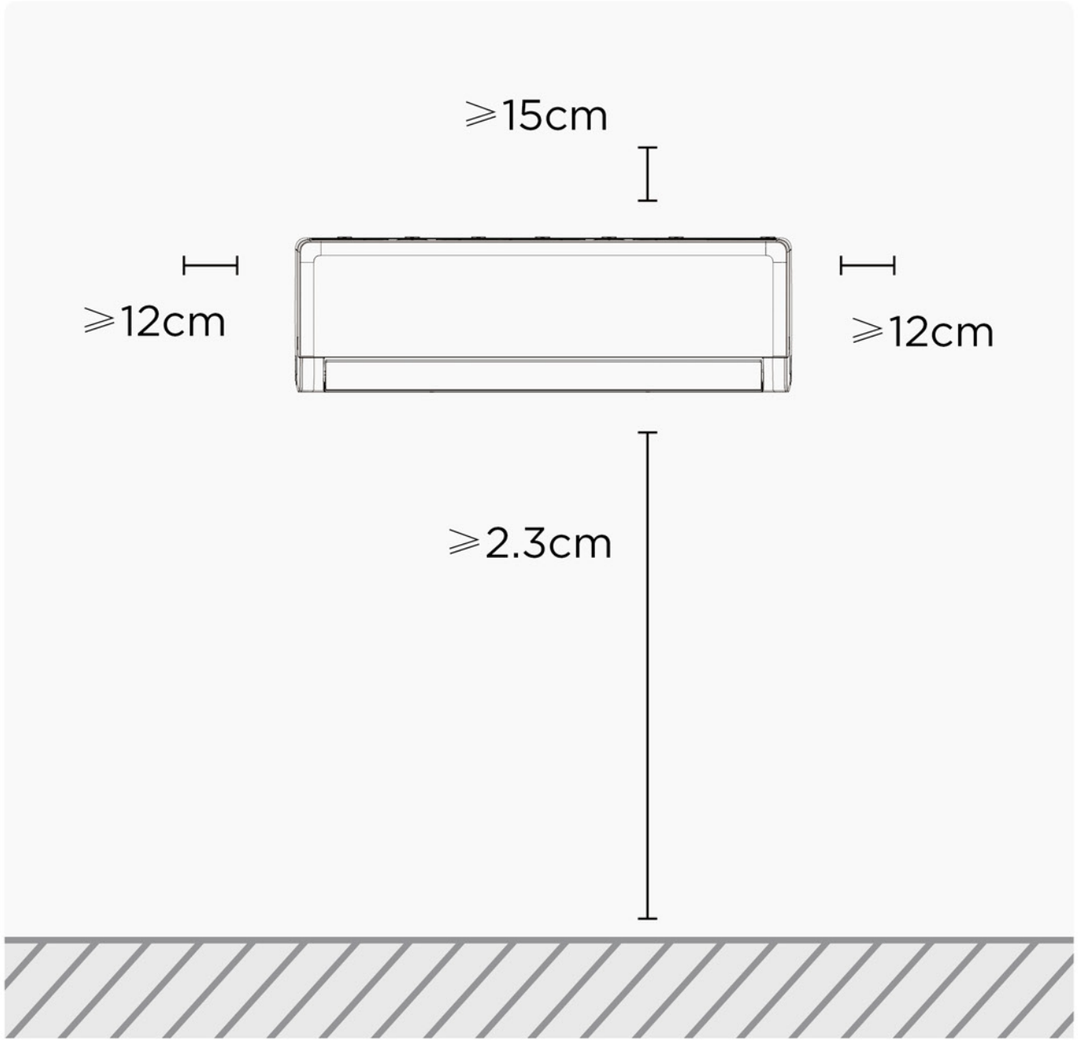

One-way Cassette

9K/12K Dimensional Drawings

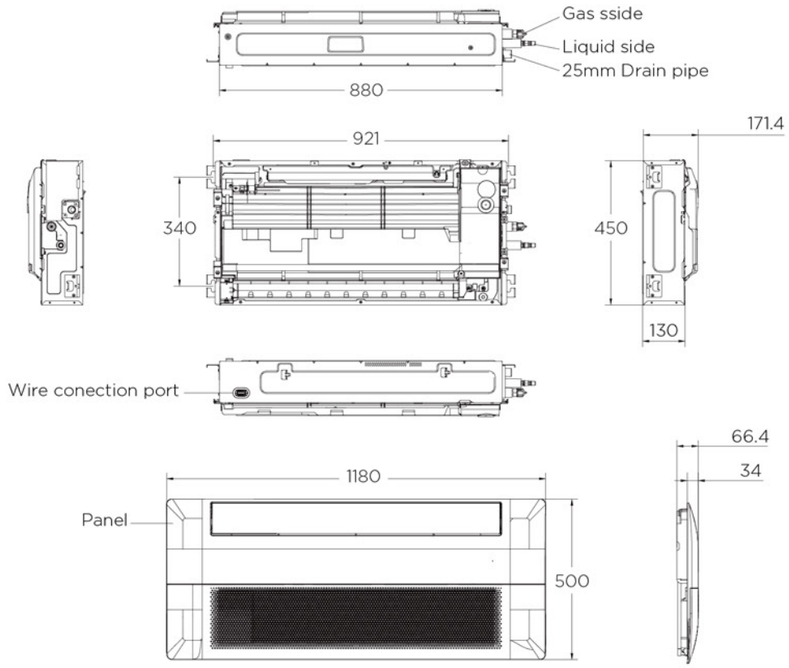

18K/24K Dimensional Drawings

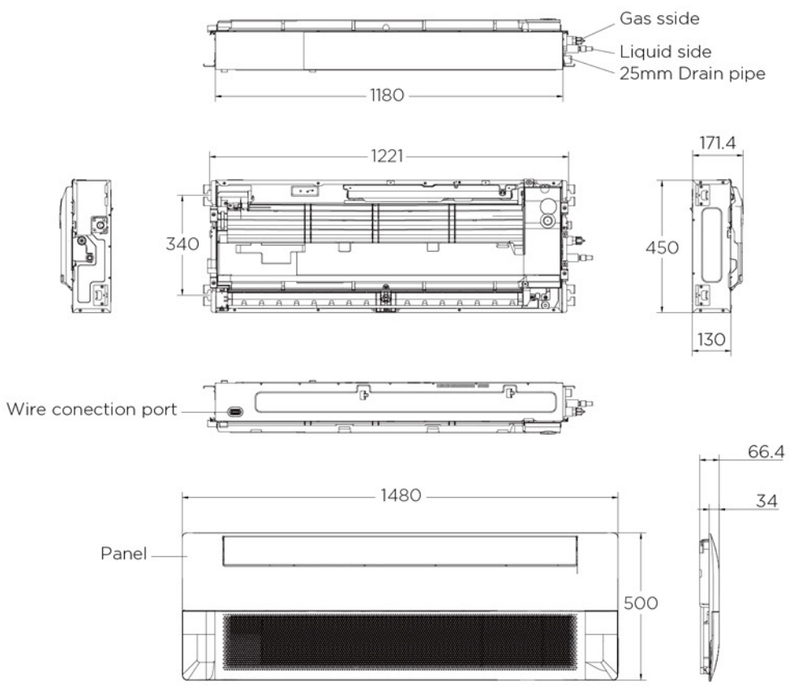

Installation place

Recommended distances between the indoor unit and the ceiling

The distance between the mounted indoor unit and the internal ceiling should meet the following specifications.

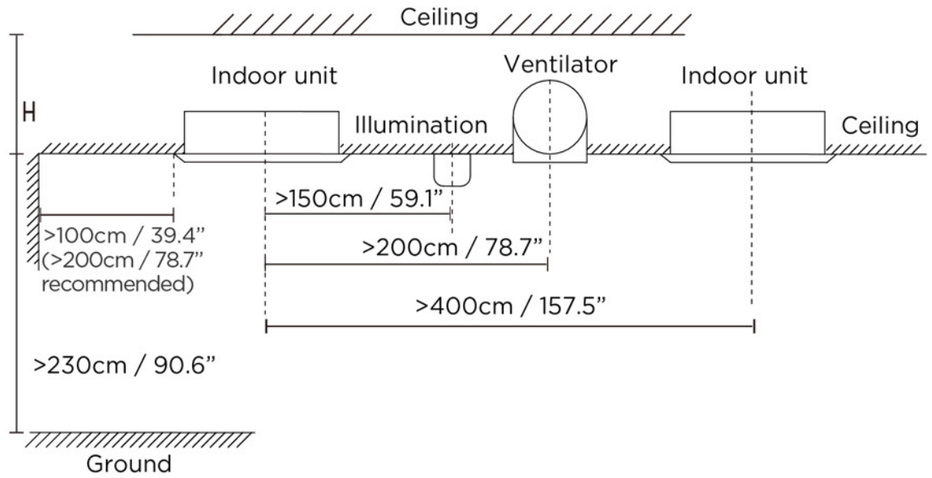

NOTE:
For detailed drawings and installation instructions of the Duct, Round Flow Compact Cassette, Round Flow Cassette, Ceiling & Floor and Console series indoor units, please refer to the Light Commercial section.

Tank

100L Dimensional Drawings

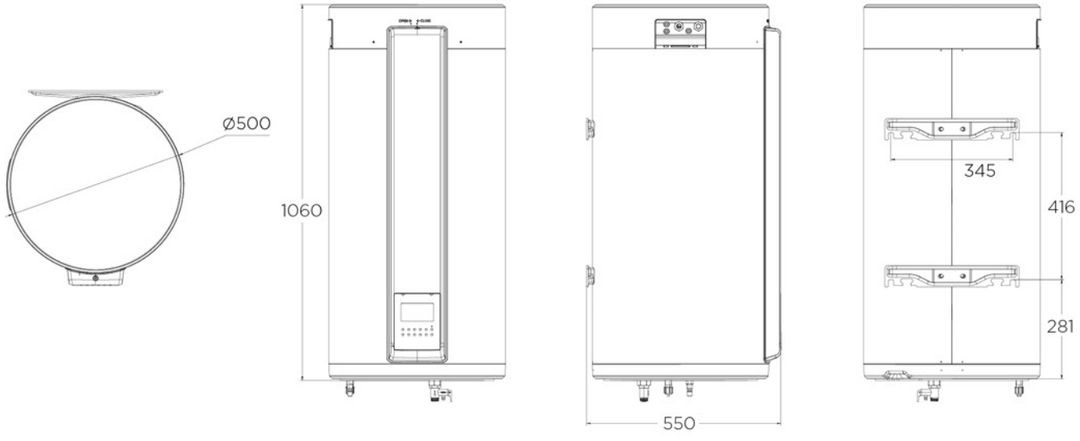

Installation place

The recommended installation heights (hx) for piping and preventing refrigerant leakage are indicated in the table.

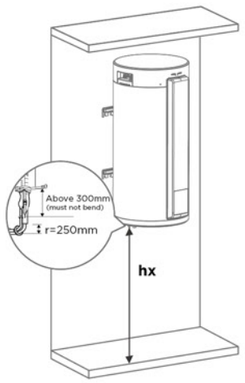

* Please refer to the following section "Minimum area requirements" to find the regulations of minimum installation area to protect from refrigerant leakage.

Installation height (unit: m)				
Dimension (hx) / Model	h1	h2	h3	h4
100L	0.6	0.8	1.0	1.3

If the water tank is installed in enclosed space (e.g. cabinet), the minimum space required for installation and maintenance is as follow. (unit: mm)

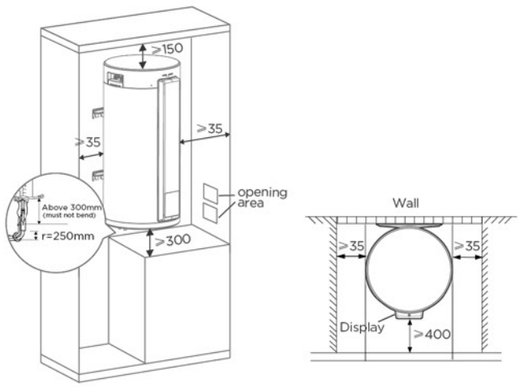

NOTE:

- The minimum required opening area of the cabinet for protecting from refrigerant leakage is 5cm.
- The minimum required bottom space for installation and routine maintenance is 300mm, more space will be needed for large-scale maintenance and piping.

190L Dimensional Drawings

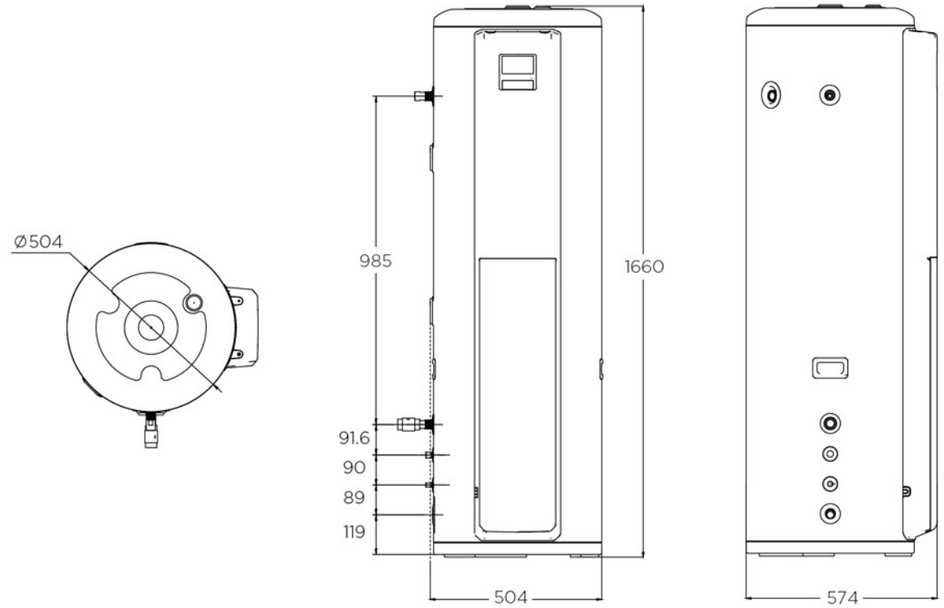

Installation place

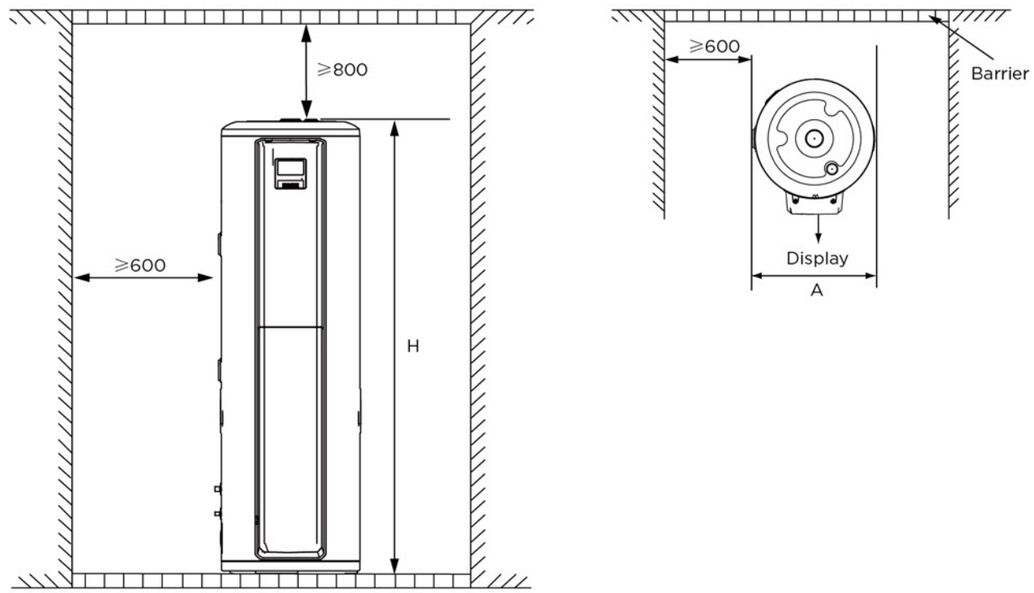

MULTI SPLIT SYSTEM TECHNICAL DRAWINGS

Outdoor units

Outdoor units — Recommended wire size

Breezeless

Model	power supply	Applicable voltage range	Rated current (A)	wiring wire outdoor unit-indoor unit
MSFAAU-09HRFN8-QRD6GW	220-240V~, 50Hz, 1Ph	198-264V	0.11	4×1.5
MSFAAU-12HRFN8-QRD6GW			0.11	4×1.5

Oasis Plus

Model	power supply	Applicable voltage range	Rated current (A)	wiring wire outdoor unit-indoor unit
MSOPBU-09HRFN8-QRE1GWV	220-240V~, 50Hz, 1Ph	198-264V	0.12	4×1.5
MSOPBU-12HRFN8-QRE1GW			0.09	4×1.5
MSOPBU-18HRFN8-QRE1GW			0.15	4×1.5

All Easy Pro

Model	power supply	Applicable voltage range	Rated current (A)	wiring wire outdoor unit-indoor unit
MSEPBU-09HRFN8-QRD6GW	220-240V~, 50Hz, 1Ph	198-264V	0.09	4×1.5
MSEPBU-12HRFN8-QRD6GW			0.1	4×1.5
MSEPCU-18HRFN8-QRD0GW			0.15	4×1.5
MSEPDU-24HRFN8-QRD0GW			0.25	4×1.5

Breezeless E

Model	power supply	Applicable voltage range	Rated current (A)	wiring wire outdoor unit-indoor unit
MSCB1BU-07HRFN8-QRD1GW	220-240V~, 50Hz, 1Ph	198-264V	0.06	4×1.5
MSCB1BU -09HRFN8-QRD1GW			0.11	4×1.5
MSCB1BU -12HRFN8-QRD1GW			0.11	4×1.5
MSCB1CU-18HRFN8-QRD1GW			0.11	4×1.5
MSCB1DU-24HRFN8-QRD1GW			0.25	4×1.5

Solstice

Model	power supply	Applicable voltage range	Rated current (A)	wiring wire outdoor unit-indoor unit
MSEZAU-09HRFN8-QRD6GW	220-240V~, 50Hz, 1Ph	198-264V	0.1	4×1.5
MSEZBU-12HRFN8-QRD6GW			0.1	4×1.5
MSEZCU-18HRFN8-QRD6GW			0.15	4×1.5
MSEZDU-24HRFN8-QRD6GW			0.25	4×1.5

EF4.0

Model	power supply	Applicable voltage range	Rated current (A)	wiring wire outdoor unit-indoor unit
MSEFAU-07HRFN8-QRD1GW	220-240V~, 50Hz, 1Ph	198-264V	0.1A	4×1.5
MSEFAU-09HRFN8-QRD1GW			0.1A	4×1.5
MSEFBU-12HRFN8-QRD1GW			0.1A	4×1.5
MSEFCU-18HRFN8-QRD1GW			0.15A	4×1.5
MSEFDU-24HRFN8-QRD1GW			0.25A	4×1.5

Xtreme

Model	power supply	Applicable voltage range	Rated current (A)	wiring wire outdoor unit-indoor unit
MSAGAU-07HRFNX-QRD1GW	220-240V~, 50Hz, 1Ph	198-264V	0.09	4×1.5
MSAGAU-09HRFN8-QRD1GW			0.13	4×1.5
MSAGBU-12HRFN8-QRD1GW			0.13	4×1.5
MSAGBU-09HRFN8-QRD1GW(GA)			0.1	4×1.5
MSAGBU-12HRFN8-QRD1GW(GA)			0.1	4×1.5
MSAGAU-09HRFNX-QRD0GW			0.11	4×1.5
MSAGBU-12HRFNX-QRD0GW			0.11	4×1.5
MSAGCU-18HRFNX-QRD0GW			0.15	4×1.5
MSAGDU-24HRFN8-QRD0GW			0.28	4×1.5

Duct

Model	power supply	Applicable voltage range	Rated current (A)	wiring wire outdoor unit-indoor unit
MTJ-07HWFNX-QRD1W(GA)	220-240V~, 50Hz, 1Ph	198-264V	0.38	4×1.5
MTJ-09HWFNX-QRD1W(GA)			0.38	4×1.5
MTJ-12HWFNX-QRD1W(GA)			0.4	4×1.5
MTJ-18HWFNX-QRD1W(GA)			0.75	4×1.5
MTJ-24HWFNX-QRD1W(GA)			0.94	4×1.5

Round Flow Compact Cassette

Model	power supply	Applicable voltage range	Rated current (A)	wiring wire outdoor unit-indoor unit
MCA4U-07HRFNX-QRD1W(GA)	220-240V~, 50Hz, 1Ph	198-264V	0.6	4×1.5
MCA4U-09HRFNX-QRD1W(GA)			0.6	4×1.5
MCA4U-12HRFNX-QRD1W(GA)			0.7	4×1.5
MCA4U-18HRFNX-QRD1W(GA)			0.75	4×1.5

Outdoor units — Recommended wire size

Round Flow Cassette

Model	power supply	Applicable voltage range	Rated current (A)	wiring wire outdoor unit-indoor unit
MCD1-24HRFNX-QRD0W(GA)	220-240V~, 50Hz, 1Ph	198-264V	0.85	4×1.5

One-way Cassette

Model	power supply	Applicable voltage range	Rated current (A)	wiring wire outdoor unit-indoor unit
MCUTAU-09HRFNX-QGW	220-240V~, 50Hz, 1Ph	198-264V	0.22	4×1.5
MCUTAU-12HRFNX-NW			0.22	4×1.5
MCUTBU-18HRFNX-NW			0.35	4×1.5
MCUTBU-24HRFNX-NW			0.35	4×1.5

Ceiling & Floor

Model	power supply	Applicable voltage range	Rated current (A)	wiring wire outdoor unit-indoor unit
MUEU-18HRFNX-QRD0W(GA)	220-240V~, 50Hz, 1Ph	198-264V	0.5	4×1.5
MUE-24HRFNX-QRD0W(GA)			0.5	4×1.5

Console

Model	power supply	Applicable voltage range	Rated current (A)	wiring wire outdoor unit-indoor unit
MFA2U-09HRFNX-QRD0W(GA)	220-240V~, 50Hz, 1Ph	198-264V	0.38	4×1.5
MFA2U-12HRFNX-QRD0W(GA)			0.4	4×1.5
MFA2U-17HRFNX-QRD0W(GA)			0.42	4×1.5

CirQHP Heat Recovery Outdoor units

18K Dimensional Drawings

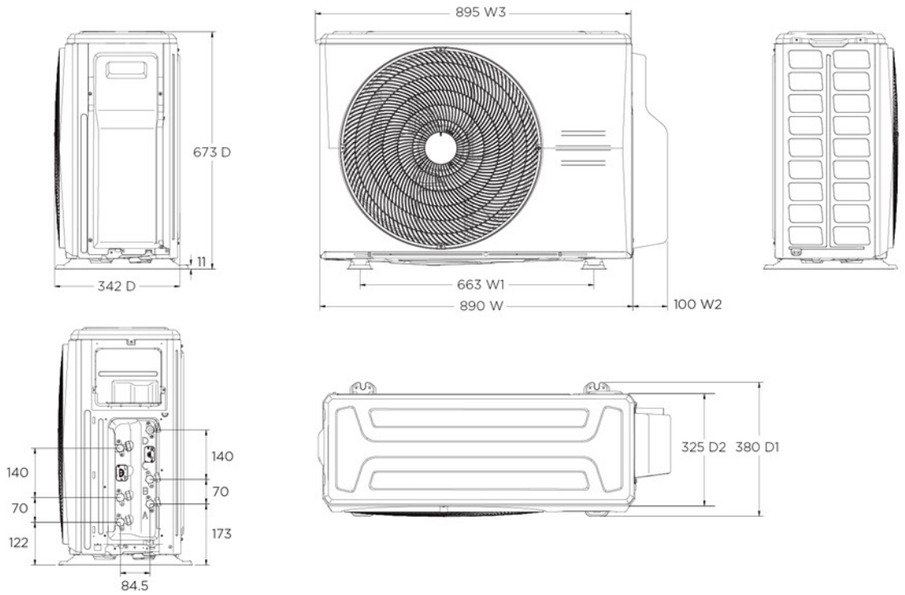

27K Dimensional Drawings

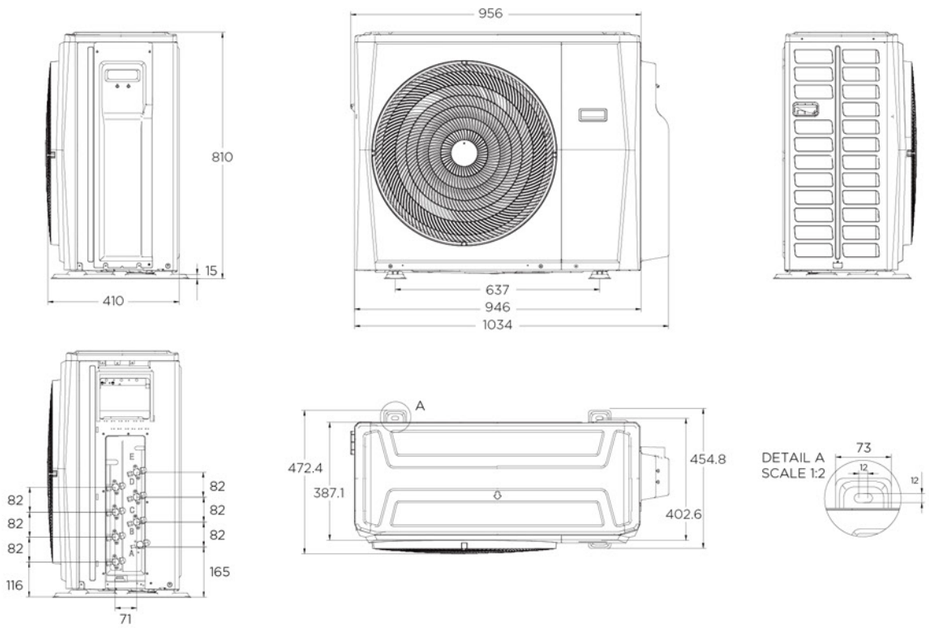

Service Place

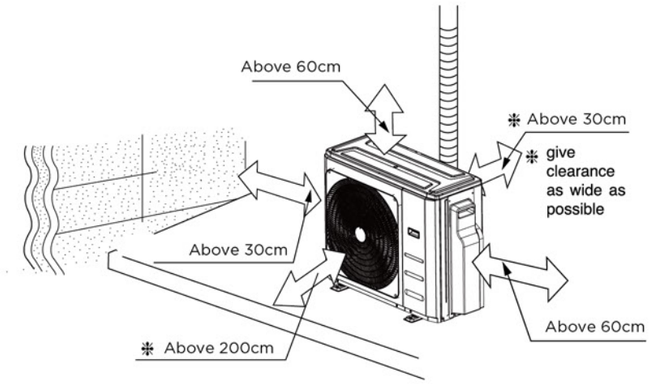

NOTE:
For multi-split type air conditioners, one outdoor unit can be matched to different types of indoor units. All of the pictures in this manual are for demonstration purposes only. Your air conditioner may be different in shape. The following pages introduce several kinds of indoor units that can be matched with the outdoor units.

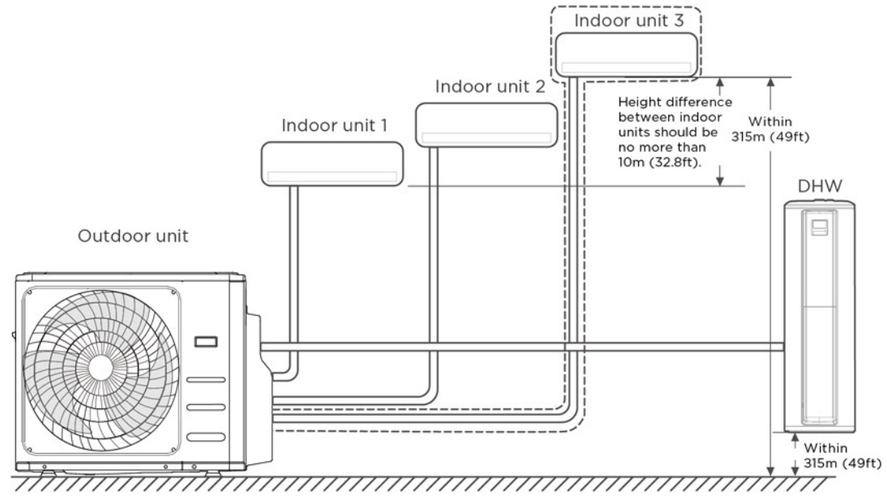

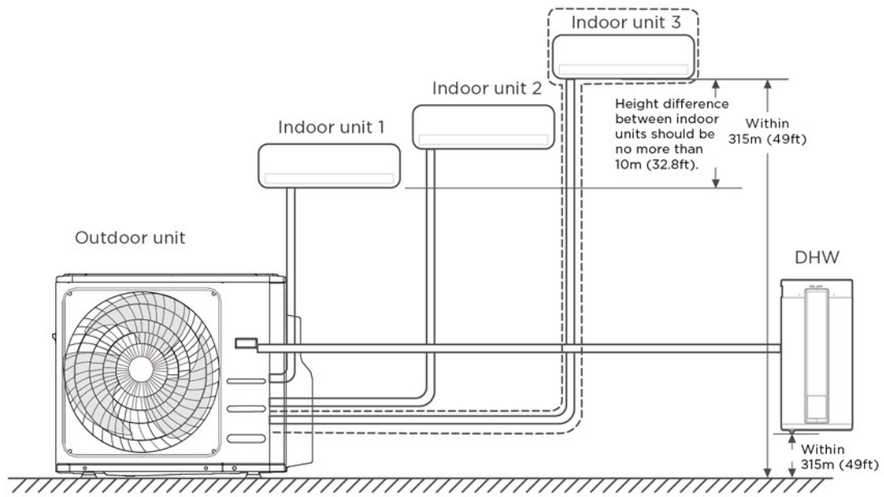

CirQHP Heat Recovery Outdoor units

When installing multiple indoor units with a single outdoor unit, ensure that the length of the refrigerant pipe and the drop height between the indoor and outdoor units meet the requirements illustrated in the next page diagram.

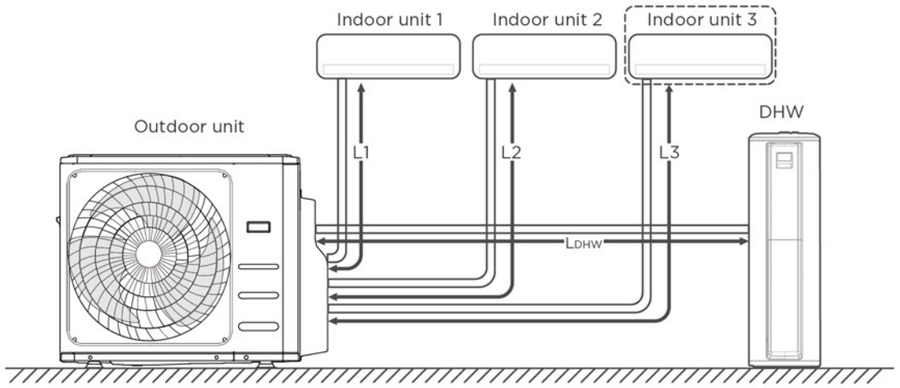

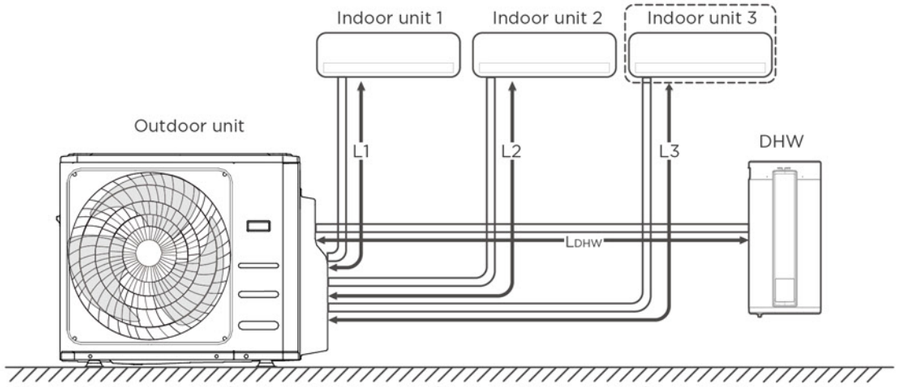

Piping length

L1/L2/L3/LDHW: Piping length is the one-way length of liquid piping.

ONE-FOUR：L1+L2+L3+LDHW=Maximum 80m

ONE-THREE：L1+L2+LDHW=Maximum 60m

Minimum piping length for each indoor unit is 3m (5m for DHW).

Maximum piping length for each indoor unit is 35m (20m for DHW).

⚠ CAUTION

- The product can be used with one DHW.
- The product can be used with an Air Conditioner unit.
- The product can be used with both a DHW and an Air Conditioner.

Installation Diagram

NOTE: The installation must be performed in accordance with the requirement of local and national standards. The installation may be slightly different in different areas.

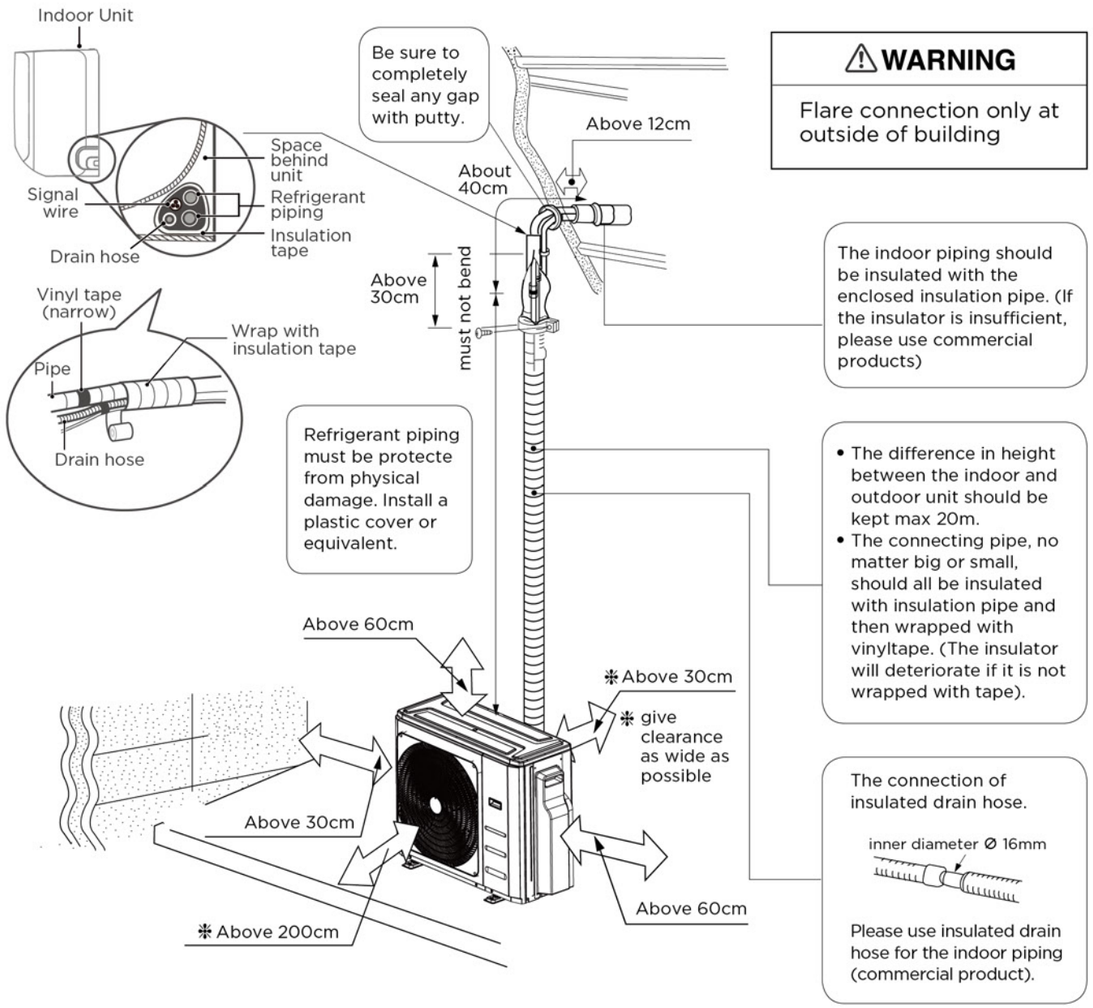

CirQHP Heat Recovery Outdoor units

Anchor Outdoor Unit

NOTE:

- The outdoor unit can be anchored to the ground or to the wall-mounted bracket with bolt(M10). Prepare the installation base of the unit according to the dimensions below.
- The following is a list of different outdoor unit sizes and the distance between their mounting feet. Prepare the installation base of the unit according to the dimensions below.

Outdoor Unit Types and Specifications (Split Type Outdoor Unit)

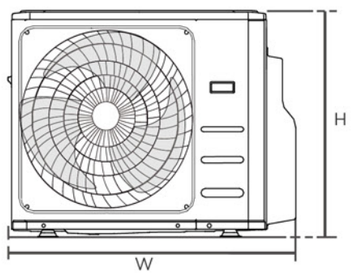

Front view

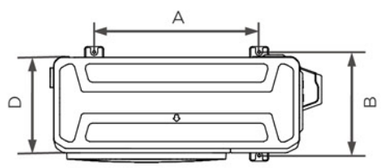

Top view

(unit: mm)

Outdoor Unit Dimensions W x H x D	Mounting Dimensions	
	Distance A	Distance B
946x810x410	673	403
890x673x342	663	354

Rows of series installation

The relations between H, A and L are as follows

	L	A
L ≤ H	L ≤ 1/2H	≥25 cm
	1/2H < L ≤ H	≥30 cm
L > H	Can not be installed	

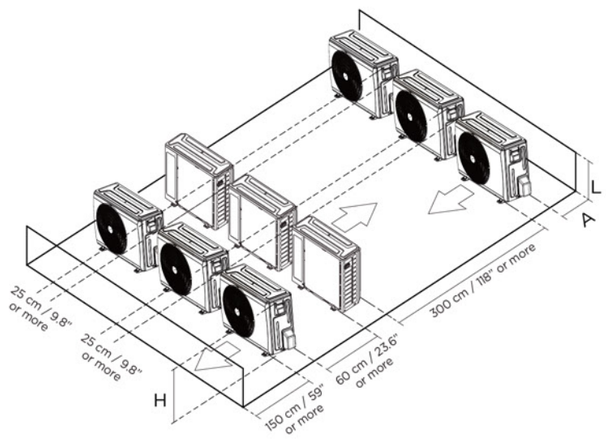

Outdoor unit pipe connection port

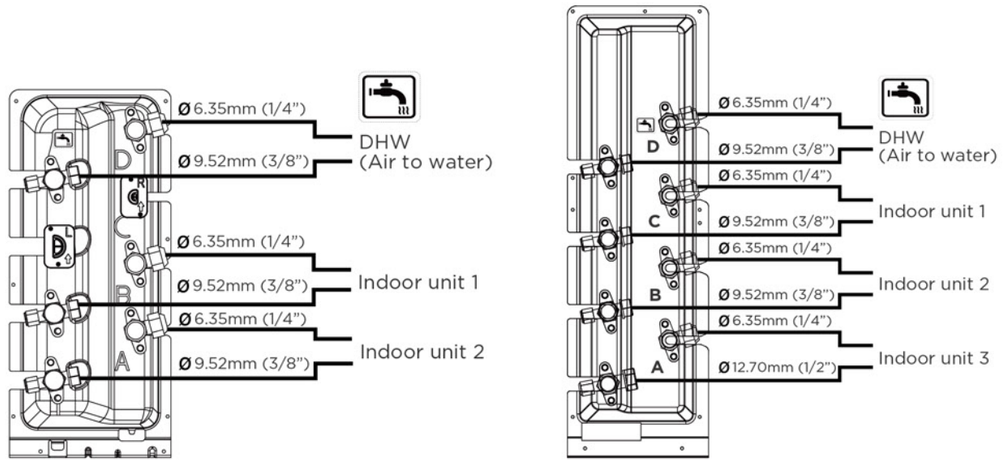

NOTE: The pipe connection ports of the outdoor unit and connectable indoor units are shown above.

Additional Refrigerant Charge

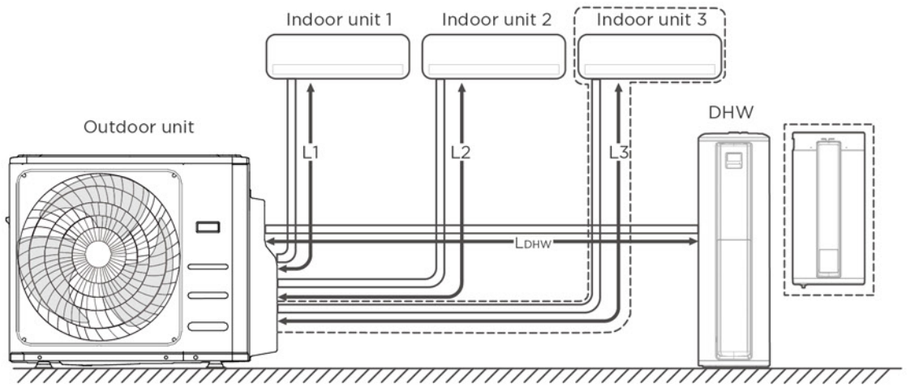

⚠ CAUTION

- Refrigerant charging must be performed after wiring, vacuuming, and the leak testing.
- **DO NOT** exceed the maximum allowable quantity of refrigerant or overcharge the system. Doing so can damage the unit or impact its functioning.

Refrigerant charge			
MODEL		M4OA-27HFN8-Q(HRU)	M3OA-18HFN8-Q(HRU)
Standard pipe length (L1+L2+.....+LDHW)	m	30	20
	ft	98.4	65.6
Additional refrigerant charge	kg	0.02x ((L1+L2+L3+LDHW)-30)	0.02x ((L1+L2+LDHW)-20)
	oz	0.215x ((L1+L2+L3+LDHW)-98.4)	0.215x ((L1+L2+LDHW)-65.6)

Multi Split System Outdoor units

M2OH-14HFN8-Q M2OE-18HFN8-Q
Dimensional Drawings

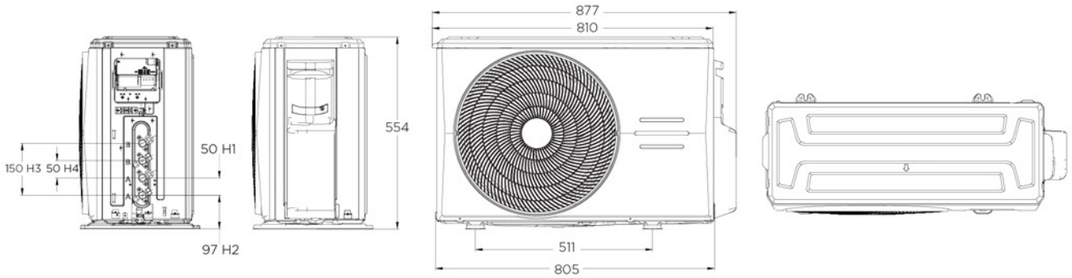

M2OF-18HFN8-Q
Dimensional Drawings

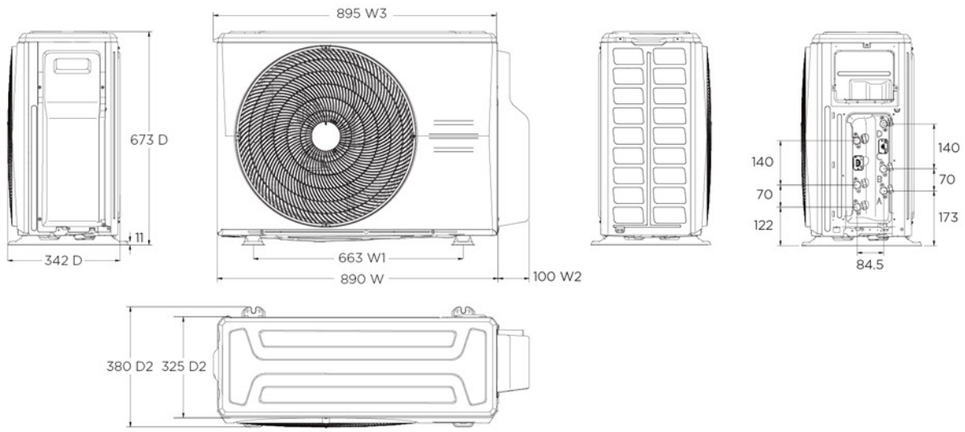

M2OI-14HFN8-Q M2OG-18HFN8-Q
Dimensional Drawings

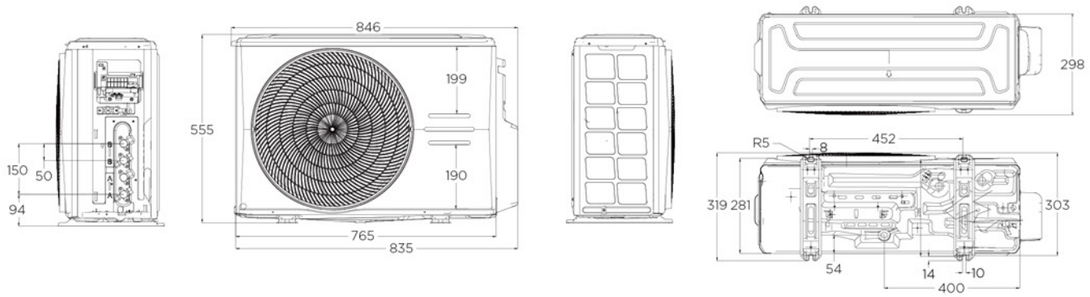

M3OA-18HFN8-Q M3OA-21HFN8-Q M3OC-27HFN8-Q
Dimensional Drawings

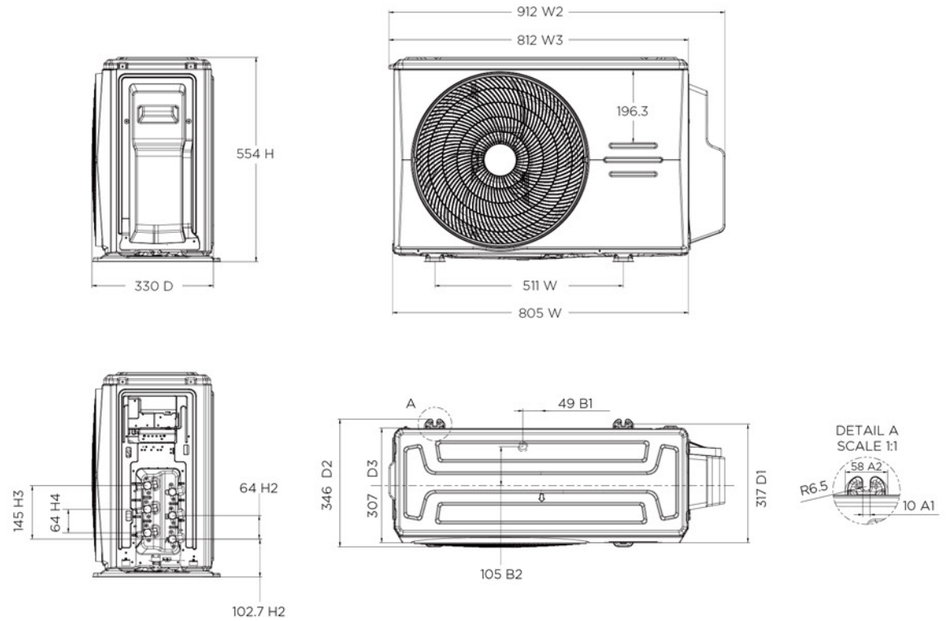

M3OG-21HFN8-Q M3OB-27HFN8-Q
Dimensional Drawings

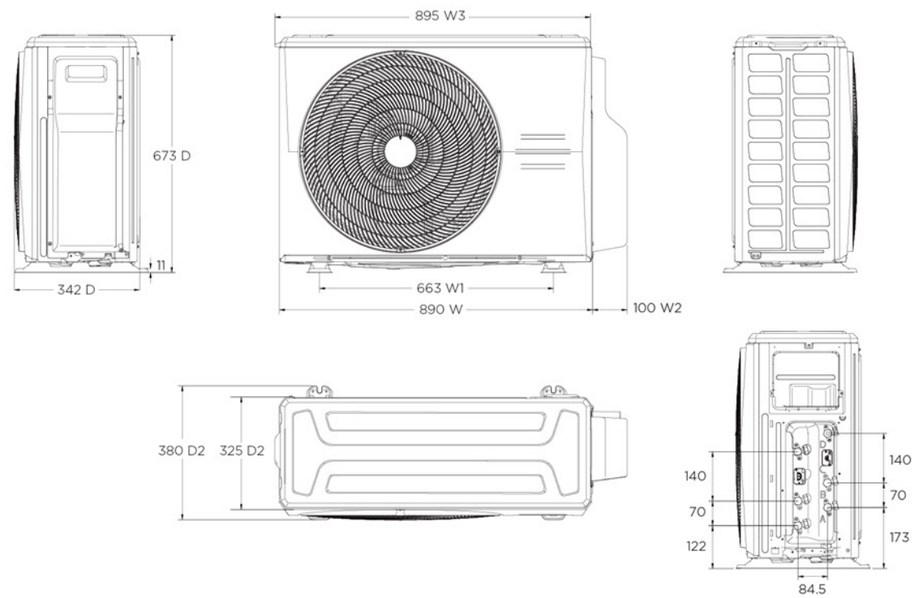

Multi Split System Outdoor units

M4OA-24HFN8-Q
Dimensional Drawings

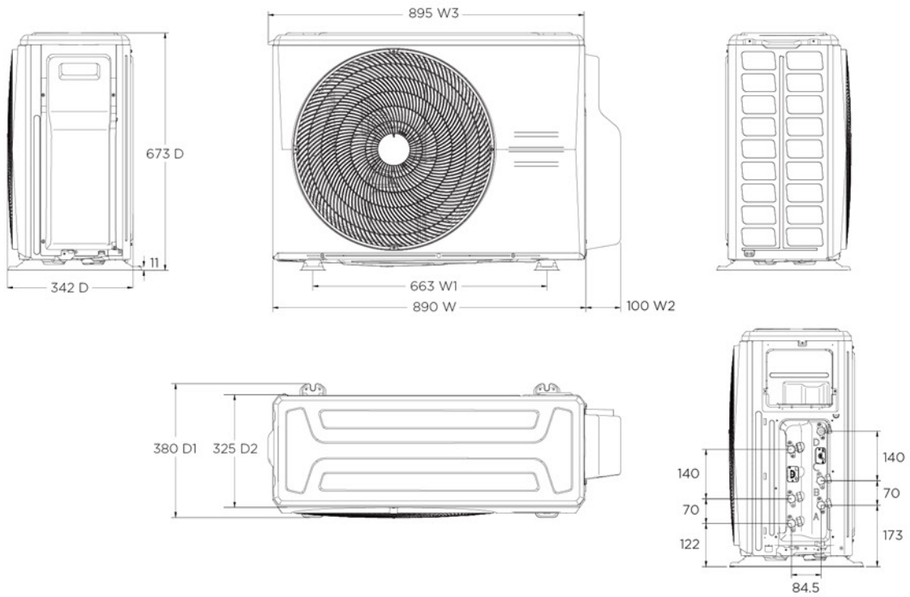

M3OC-27HFN8-Q
Dimensional Drawings

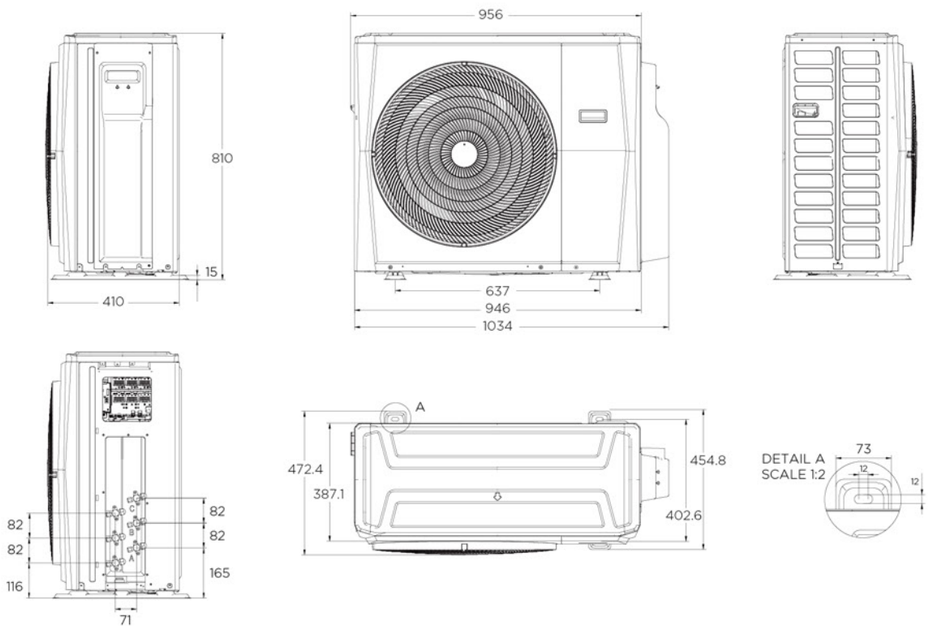

M4OE-28HFN8-Q M4OB-36HFN8-Q
Dimensional Drawings

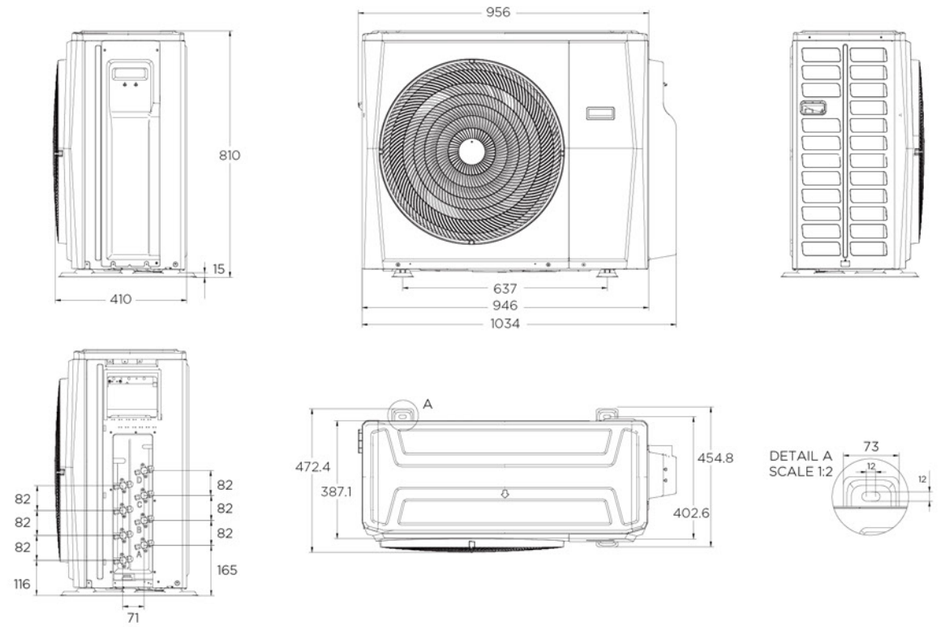

M5OE-42HFN8-Q
Dimensional Drawings

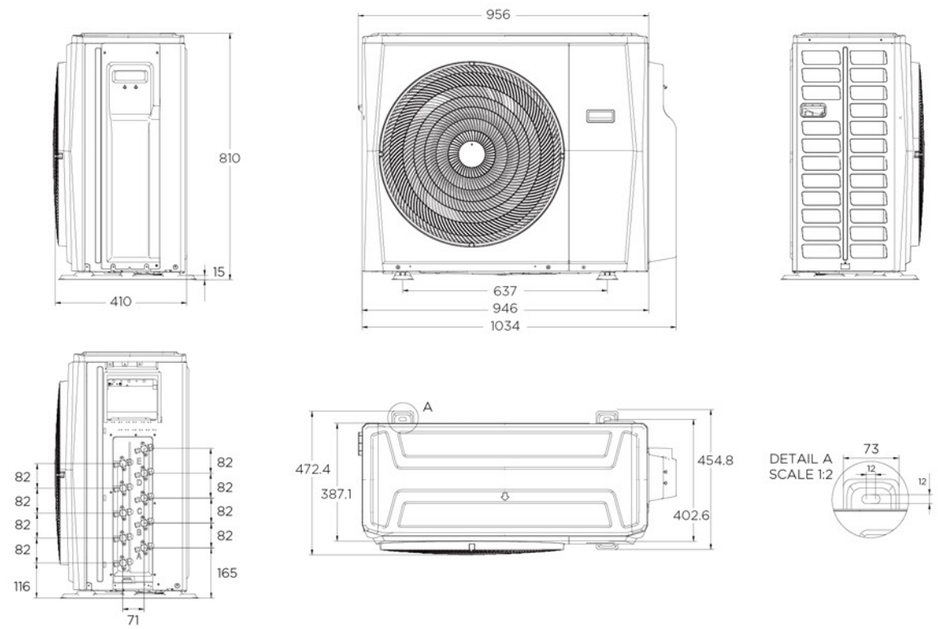

Multi Split System Outdoor units

When installing multiple indoor units with a single outdoor unit, ensure that the length of the refrigerant pipe and the drop height between the indoor and outdoor units meet the requirements illustrated in the following diagram:

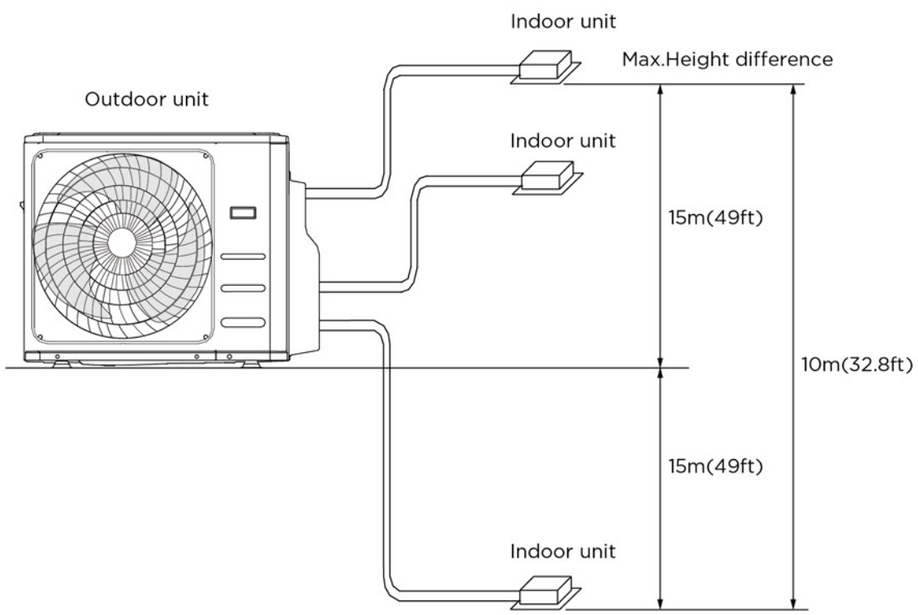

Model	Pipe Size(Diameter:ø)mm			Piping length(m)		Maximum drop height (m)		Additional Refrigerant
	Gas	Liquid	Rated	Max Single	Max Total	IDU and ODU	Between IDUs	
M2OH-14HFN8-Q	2x9.52	2x6.35	15	25	40	15	10	12g/m
M2OE-18HFN8-Q								
M2OF-18HFN8-Q								
M3OA-18HFN8-Q	3x9.52	3x6.35	22.5	30	60	15	10	12g/m
M3OG-21HFN8-Q								
M3OB-27HFN8-Q								
M3OC-27HFN8-Q	2x9.52+1x12.7	3x6.35	22.5	30	60	15	10	12g/m
M4OA-24HFN8-Q	4x9.52	4x6.35	30	35	80	15	10	12g/m
M4OE-28HFN8-Q	3x9.52+1x12.7	4x6.35	30	35	80	15	10	12g/m
M4OB-36HFN8-Q								
M5OE-42HFN8-Q	4x9.52+1x12.7	5x6.35	37.5	35	80	15	10	12g/m

Service Place

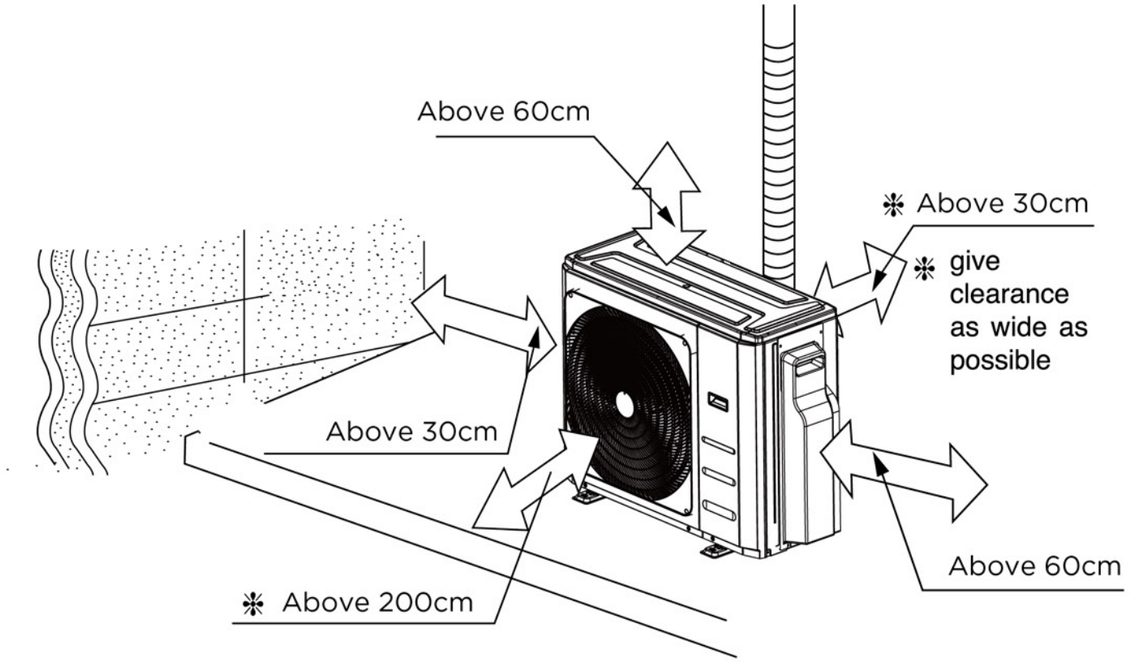

Multi Split System Outdoor units

Installation Diagram

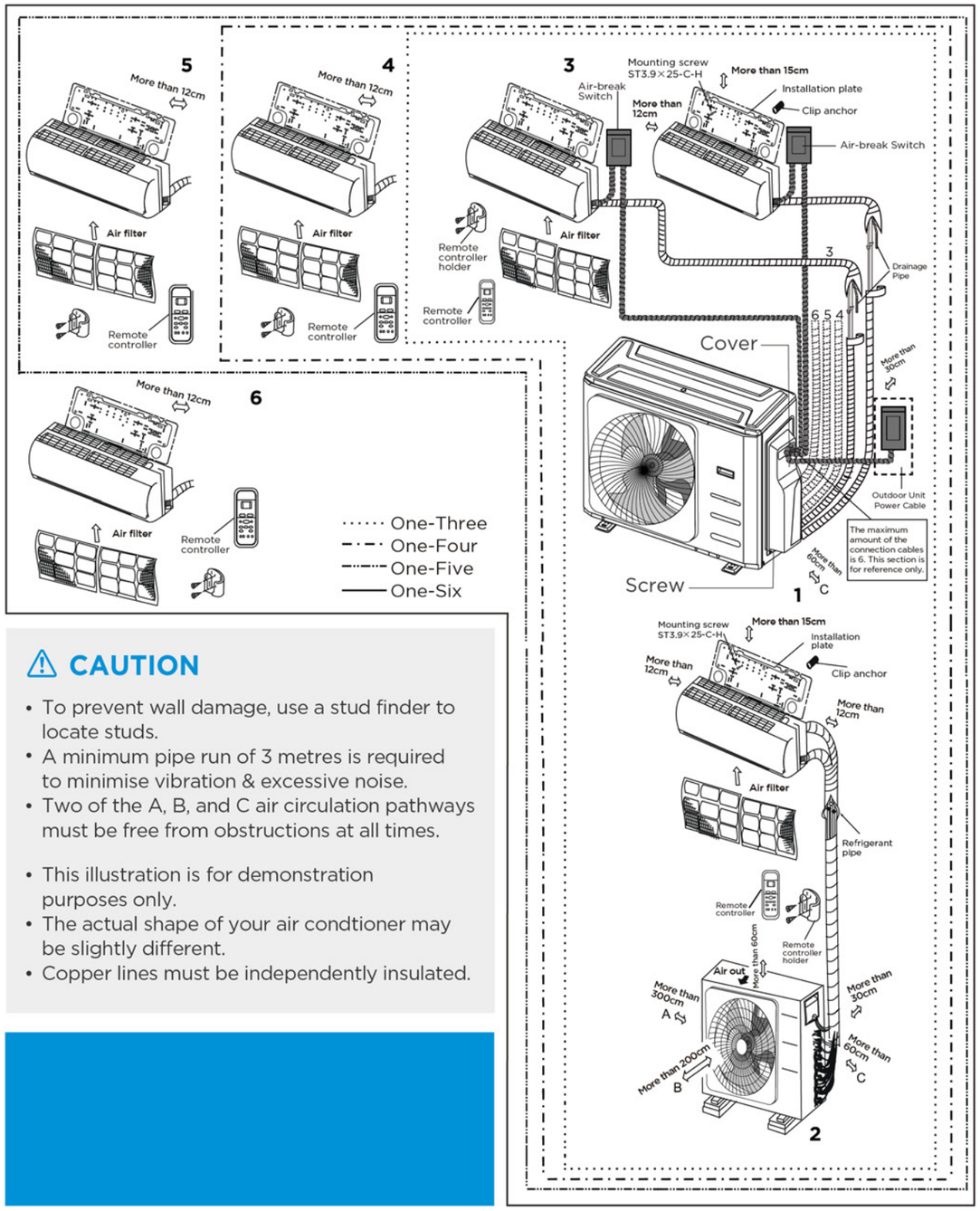

⚠ CAUTION

- To prevent wall damage, use a stud finder to locate studs.
- A minimum pipe run of 3 metres is required to minimise vibration & excessive noise.
- Two of the A, B, and C air circulation pathways must be free from obstructions at all times.

- This illustration is for demonstration purposes only.
- The actual shape of your air condtioner may be slightly different.
- Copper lines must be independently insulated.

Anchor Outdoor Unit

NOTE:

- The outdoor unit can be anchored to the ground or to the wall-mounted bracket with bolt(M10). Prepare the installation base of the unit according to the dimensions below.
- The following is a list of different outdoor unit sizes and the distance between their mounting feet. Prepare the installation base of the unit according to the dimensions below.

Outdoor Unit Types and Specifications (Split Type Outdoor Unit)

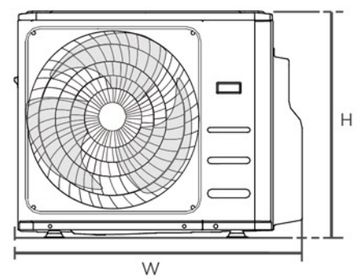

Front view

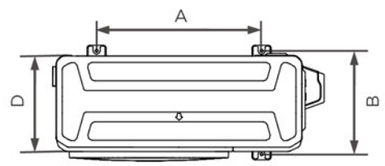

Top view

Outdoor Unit Dimensions W x H x D	Mounting Dimensions(unit : mm)	
	Distance A	Distance B
805x330x554	511	317
890x673x342	663	354
946x810x410	673	403

Rows of series installation

The relations between H, A and L are as follows

	L	A
L ≤ H	L ≤ 1/2H	≥25 cm
	1/2H < L ≤ H	≥30 cm
L > H	Can not be installed	

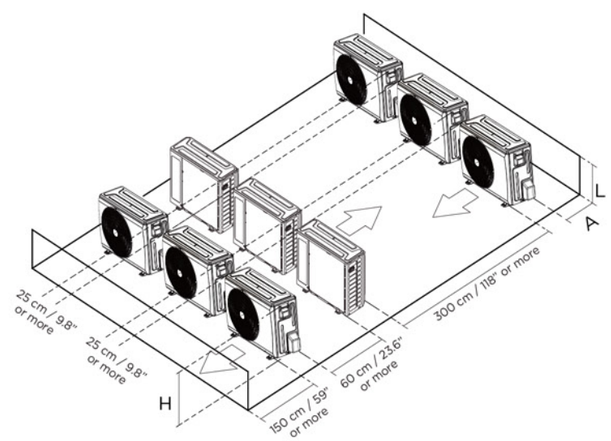

Multi Split System Outdoor units

Additional Refrigerant Per Pipe Length

Connective Pipe Length(m)	Air Purging Method	Additional Refrigerant	
The standard pipe length One drive two outdoor unit:15m/49.2 One drive three outdoor unit:22.5m/73.8 One drive four outdoor unit: 30m/98.4 One drive five outdoor unit: 37.5m/123 One drive six outdoor unit: 45m/147.6	Vacuum pump	N/A	
More than the standard pipe length	Vacuum pump	Liquid Side:Φ6.35(Φ1/4") R32 (Total pipe length - The standard pipe length)×12g/m	Liquid Side:Φ9.52(Φ3/8") R32 (Total pipe length - The standard pipe length)×24g/m

NOTE:

The standard pipe length refers to the pipe length for which refrigerant has been added when the machine leaves the factory. When the actual pipe length is not greater than this pipe length, there is no need to add refrigerant. Total pipe length refers to the actual total length of the pipe used. Whether to add refrigerant is determined by the total pipe length, regardless of the number of connected indoor units.

LIGHT COMMERCIAL TECHNICAL DRAWINGS

Indoor units

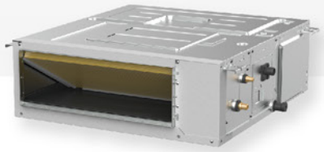



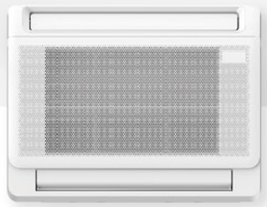


CATALOGUE

Duct
Round Flow Cassette
Round Flow Compact Cassette
Ceiling & Floor
Console
Floor Standing

Duct

9K/12K Dimensional Drawings

Unit: inch/mm

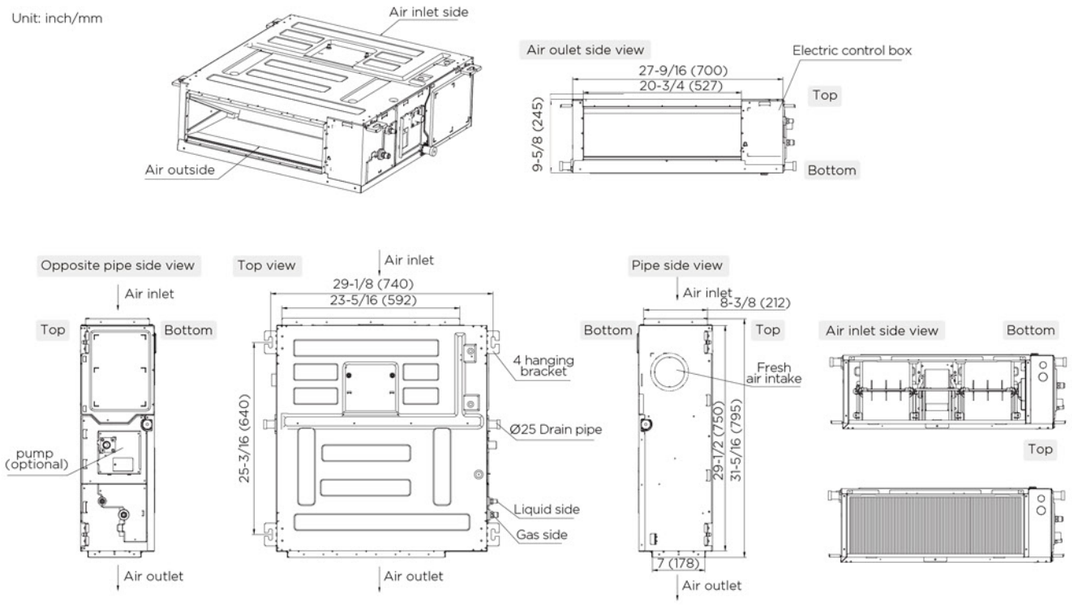

18K Dimensional Drawings

Unit: inch/mm

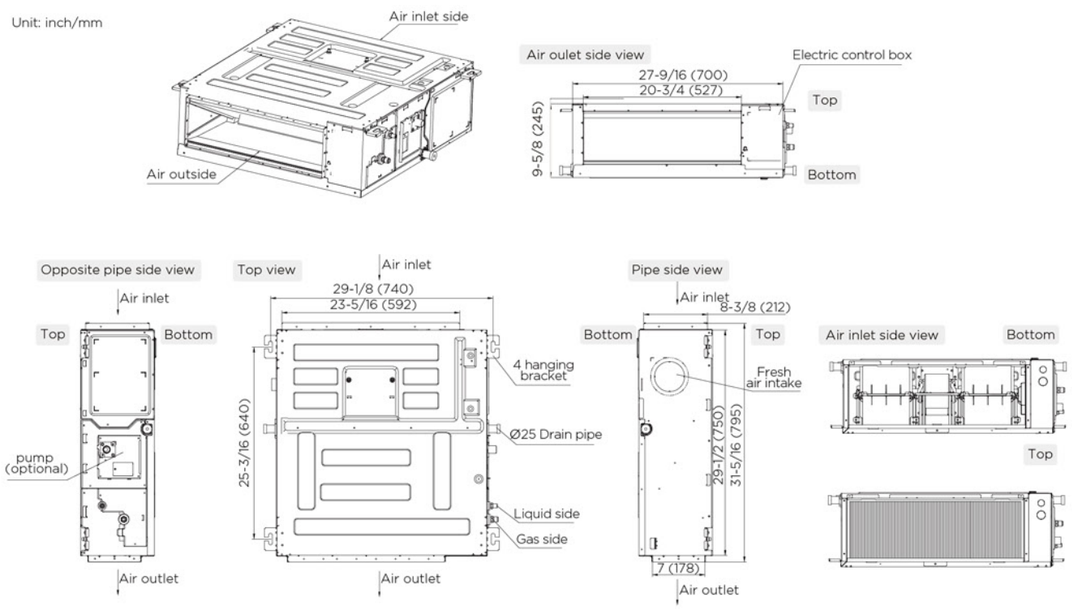

24K/30K Dimensional Drawings

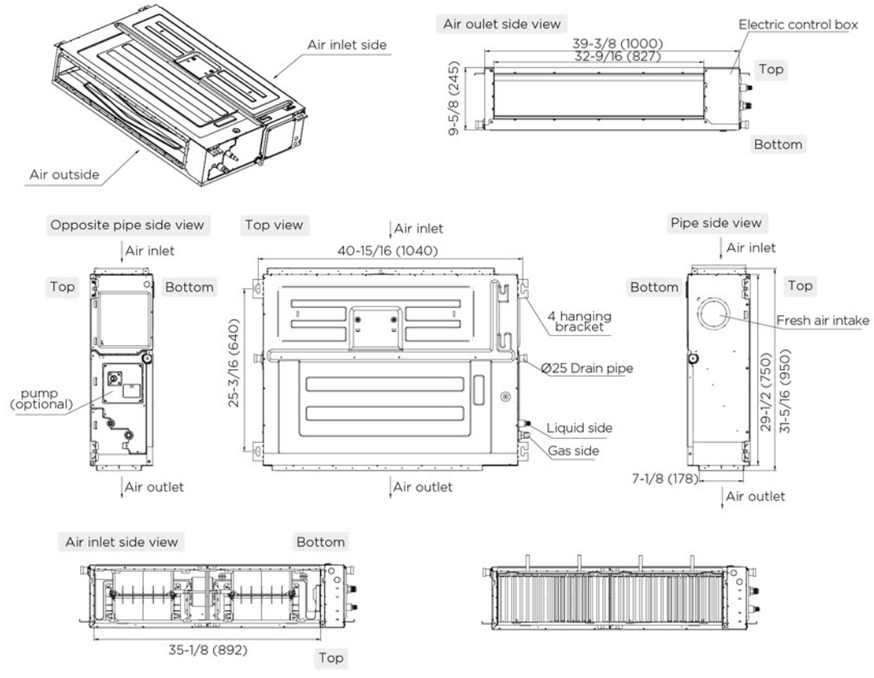

36K/42K/48K Dimensional Drawings

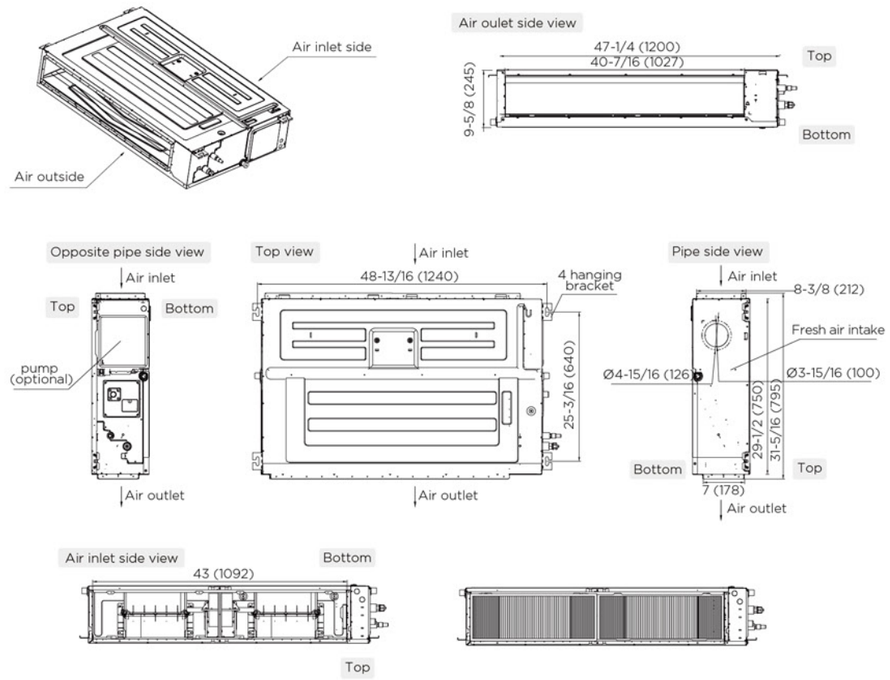

Duct

55K Dimensional Drawings

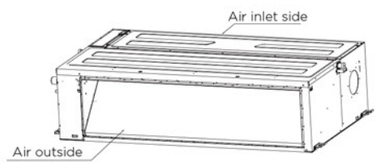

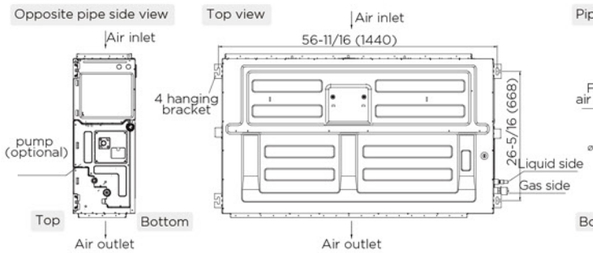

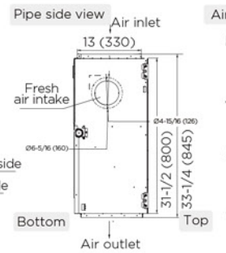

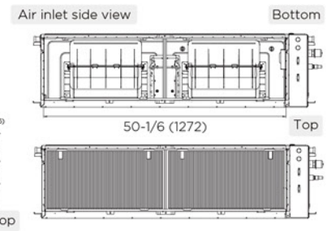

Duct Installation place

The distance between the mounted indoor unit should meet the specifications illlustrated in the following diagram.

(1) Ceiling-mounted

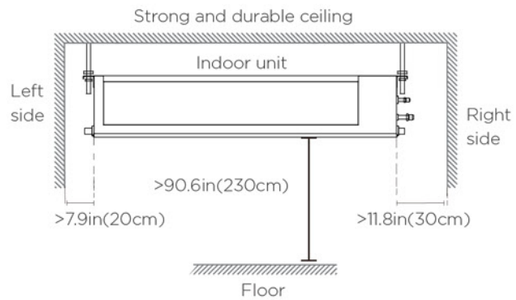

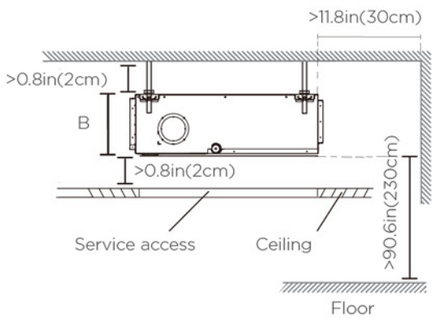

Maintenance space

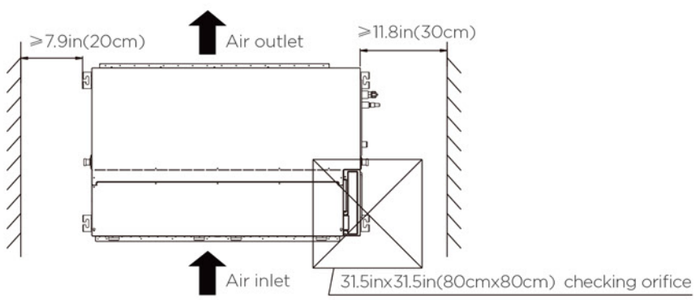

(2) Wall-mounted

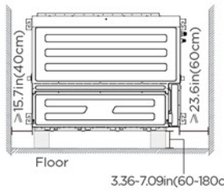

The unit supports wall mounted, if the unit is purchased with a pump and requires vertical mounting, please follow the steps below.

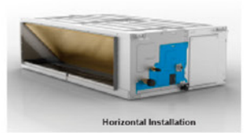

1. Remove the electrical control box cover, unplug the pump and water level switch terminals from the main control board.

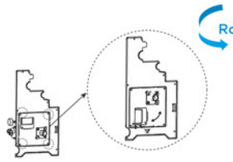

2. Disassemble the pump components.Remove the 4 screws, rotate the water pump components by 90° and fix them to the water pump mounting plate again.

3. Install the pump parts to the machine and connect the wiring set.

Duct fresh air duct installation

Dimension

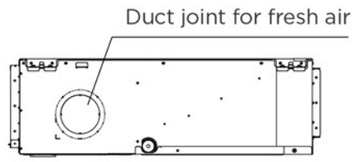

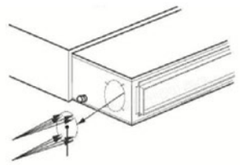

Remove the fresh air baffle

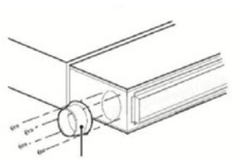

Round duct

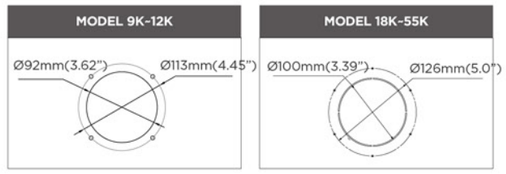

1. When connecting a fresh air duct, cut out the fresh air baffle. If the fresh air duct is not in use, seal the gaps of the fresh air baffle with sponge.
2. Install a round duct to connect the fresh air duct.
3. Both the duct and the round duct must be well sealed and insulated.
4. The fresh air must be filtered and treated before use.

Ports for Ventilation Fan

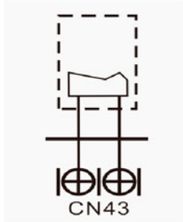

FAN FOR THE FRESH AIR OR ANION GENERATOR

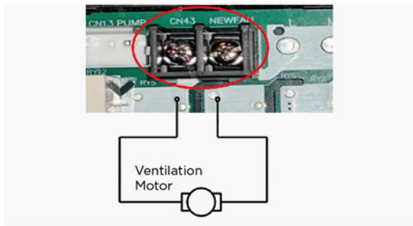

There is a 220V power supply from these 2 ports. If the input power of ventilation motor is lower than 200W, it can be connected to these ports directly.

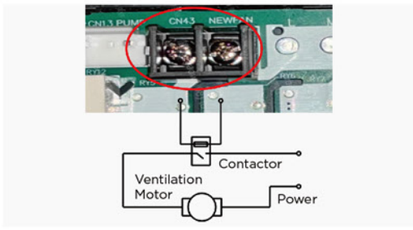

If the input power of the ventilation motor is more than 200W, a contactor should be installed to control the motor. And the power supply from the ports can be used to connect the windings of the contactor so as to control the big ventilation motor.

ATTENTION:

Insulation layers should be applied to air supply, return, and fresh air ducts to prevent heat loss and condensation, using adhesive nails, insulation cotton with aluminum foil, and sealing joints with aluminum foil tape. Other insulation materials can also be used. Ducts should be fixed to pre-cast floor slabs with metal brackets, and joints sealed to prevent air leakage. Design and construction must comply with national standards, ensuring noise reduction and vibration damping. Return air ducts should be 150mm from walls, with filter screens added to vents. Fresh air duct installation may require additional materials not included as factory components.

Round Flow Cassette

24K~55K Dimensional Drawings

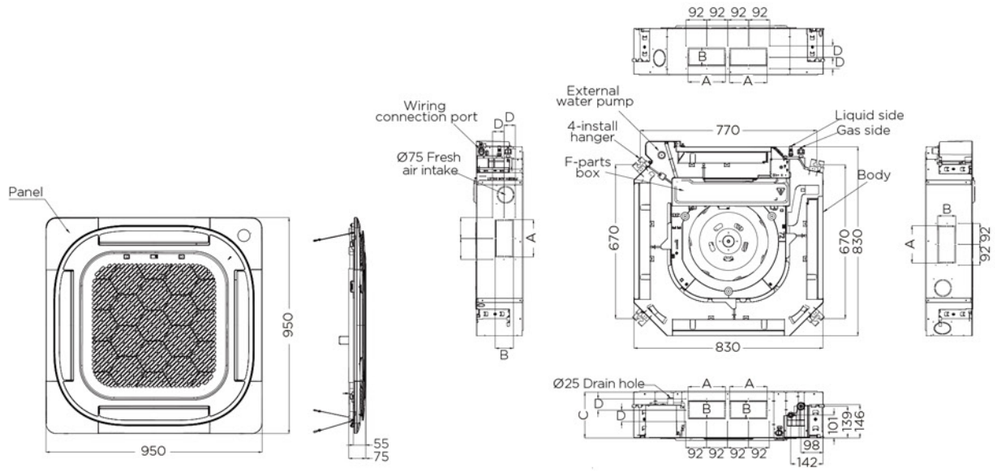

Unit: inch/mm				
MODEL	A	B	C	D
18-30K	165/6.5	80/3.15	250/8.07	50/1.97
30-36K	165/6.5	100/3.94	245/9.65	60/2.36
42-55K	165/6.5	165/3.94	287/11.3	60/2.36

Installation place

Recommended distances between the indoor unit and the ceiling

The distance between the mounted indoor unit should meet the specifications illustrated in the following diagram

(A)

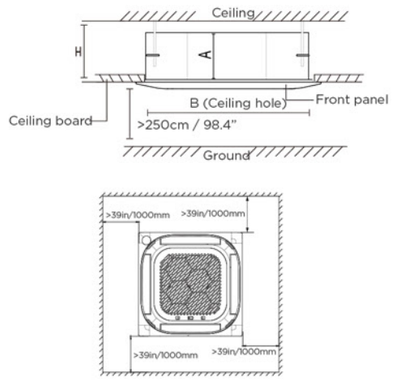

(B)

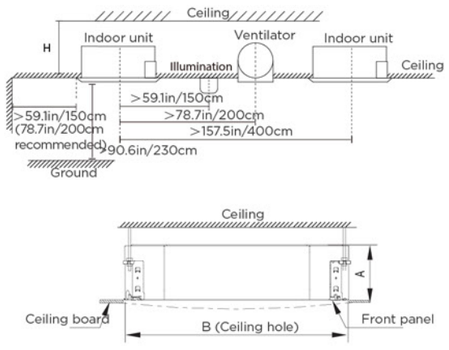

Distance from ceiling relative to height of indoor unit

TYPE	MODEL	Length of A(mm)	Length of H(mm)	Length of B(mm)
Round Flow Cassctte	24K	205	>230	800
	30-36K	245	>275	
	42-55K	287	>317	

Distance from ceiling relative to height of indoor unit

MODEL	Length of A(mm)	Length of H(mm)	Length of B(mm)
24K	205	230	900
30-36K	245	271	
42-55K	287mm	313	

Round Flow Compact Cassette

9K/12K/18K Dimensional Drawings

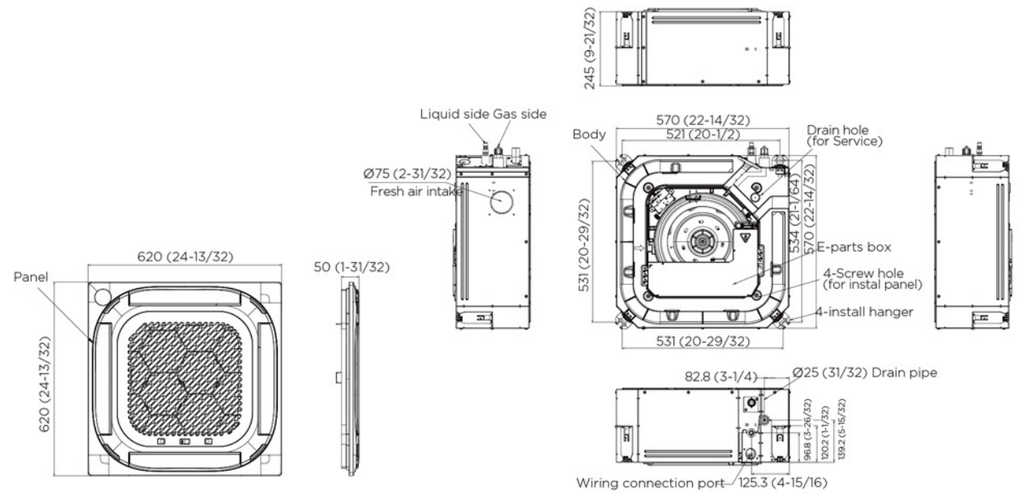

Installation place

The distance between the mounted indoor unit should meet the specifications illustrated in the following diagram.

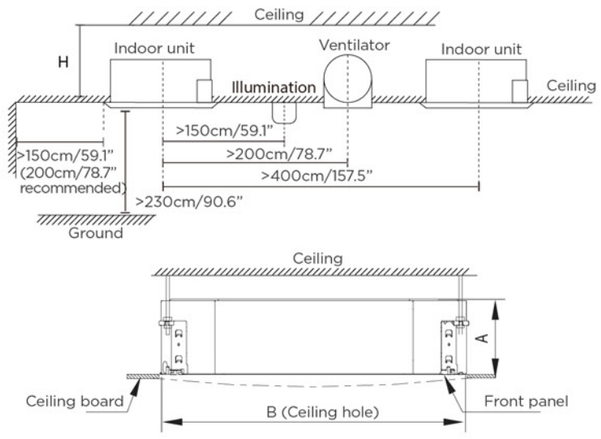

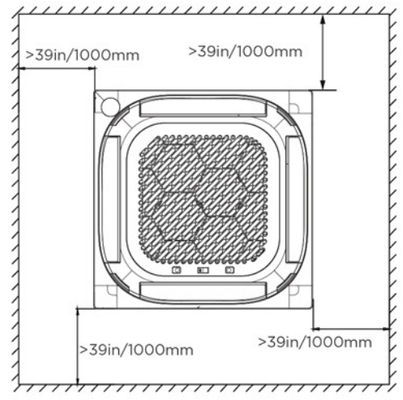

Ceiling & Floor

18K~55K Dimensional Drawings

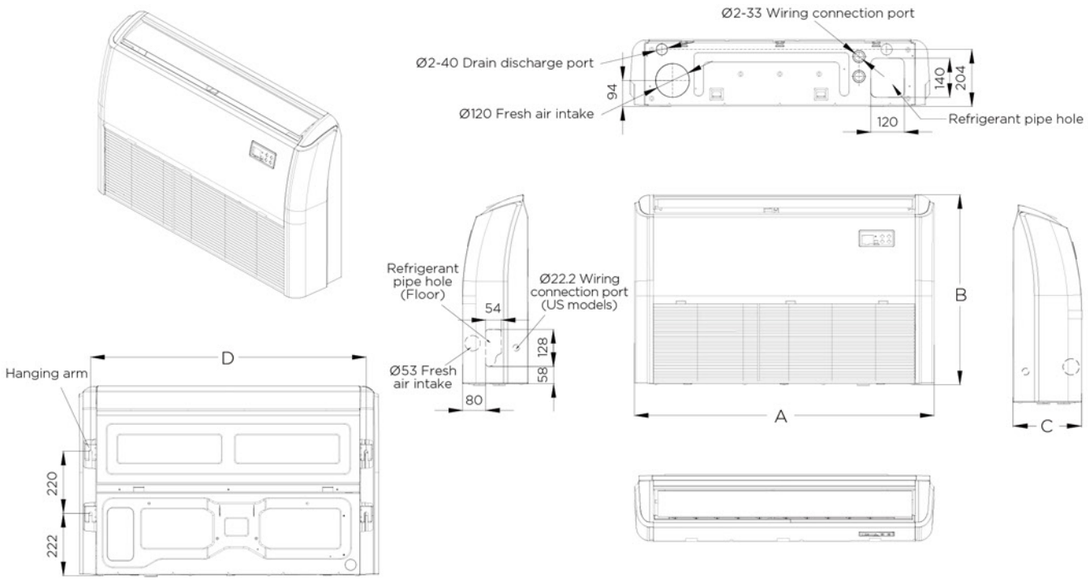

Unit: inch/mm				
MODEL	A	B	C	D
18-24K	1068	675	235	983
30-48K	1285	675	235	1200
36-48K	1650	675	235	1565
55K	1650	675	235	1565

Installation place

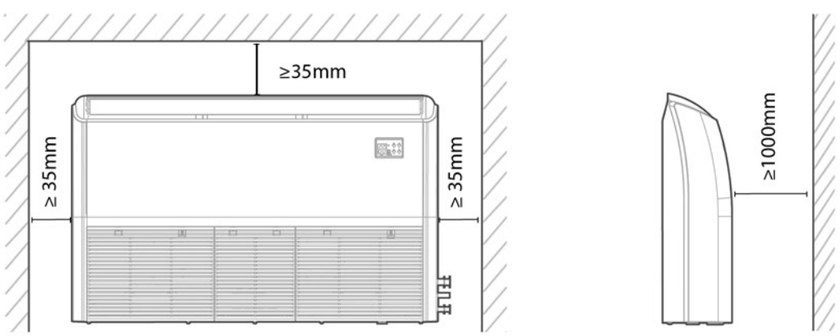

Console

9K~18K Dimensional Drawings

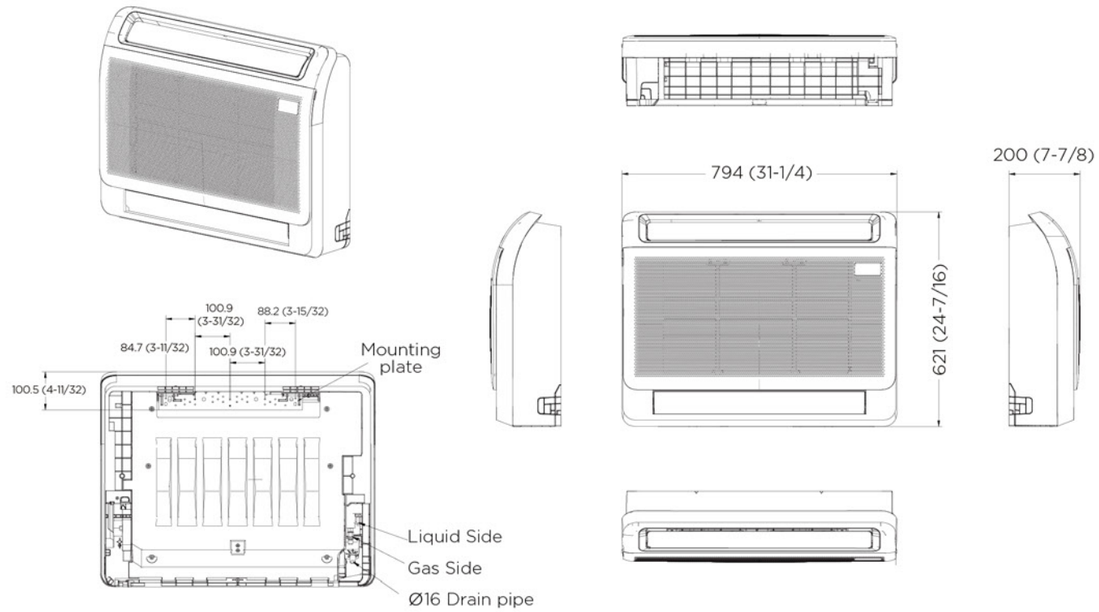

Installation place

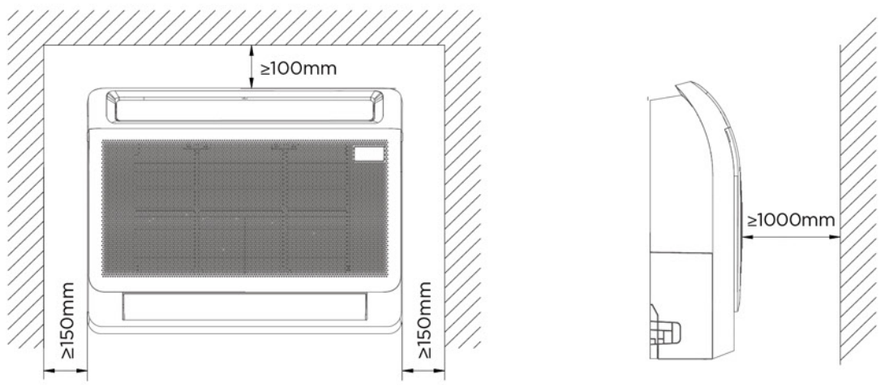

Floor Standing

M Floor Standing 48K~55K
Dimensional Drawings

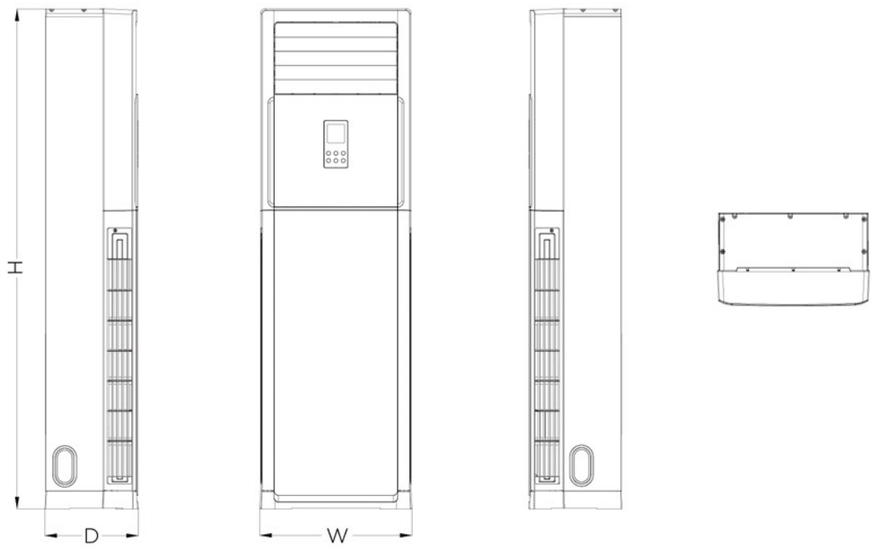

Capacity(Btu/h)	W(mm)	D(mm)	H(mm)
48K/55K	600	455	1934

Installation place

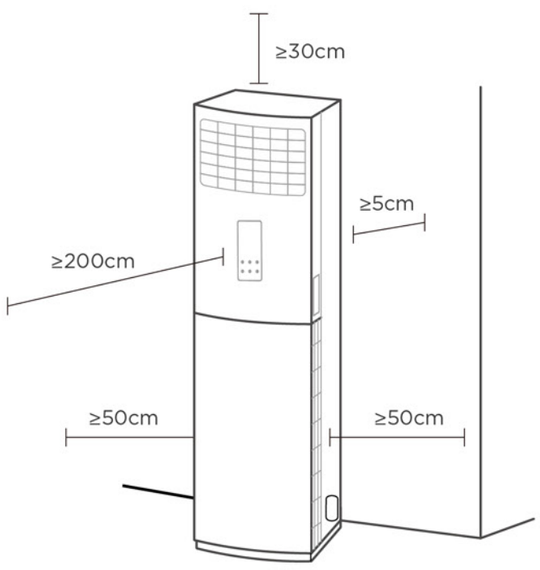

FN Floor Standing 48K~55K
Dimensional Drawings

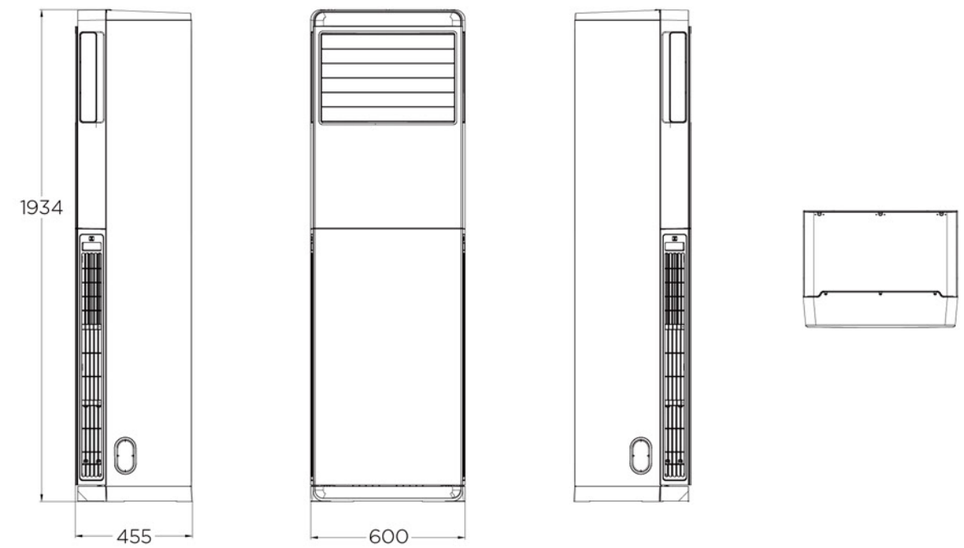

Installation place

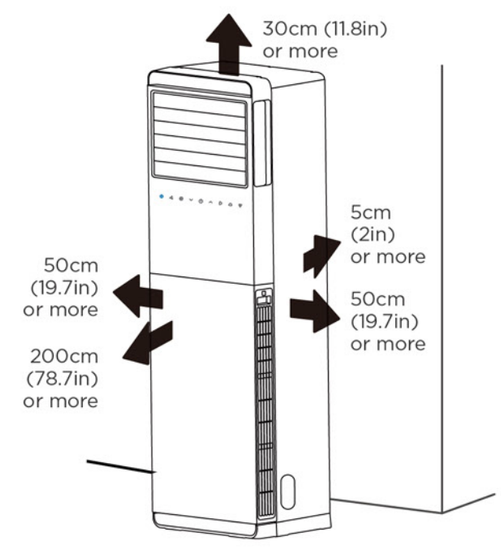

Duct / Cassette /Ceiling & Floor/ Console

Alarm and ON/OFF connectors introduce

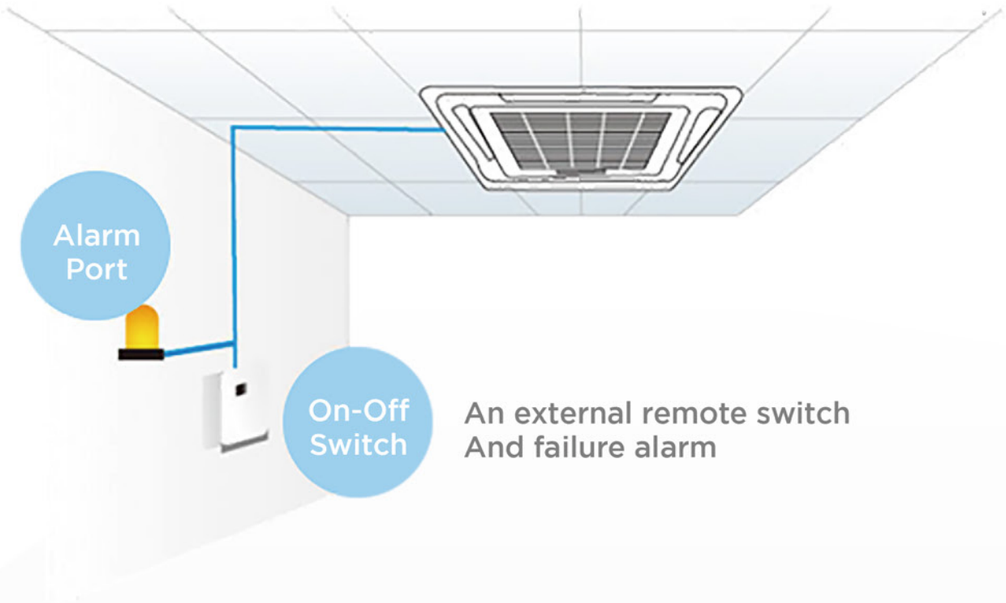

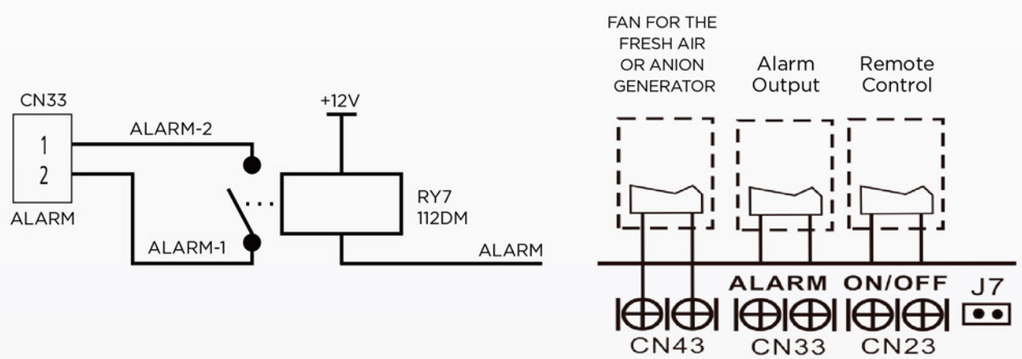

For remote control (ON-OFF) terminal port CN23 and short connector of J7/JR6

1. Remove the short connector of J7/JR6 when you use ON-OFF function.
2. When remote switch off (OPEN); the unit would be off.
3. When remote switch on (CLOSE); the unit would be on.
4. When close/open the remote switch, the unit would be responded the demand within 2 seconds.
5. When the remote switch on, you can use remote controller/ wire controller to select the mode what you want; when the remote switch off, the unit would not respond the demand from remote controller/wire controller . when the remote switch off, but the remote controller/wire controller are on, CP code would be shown on the display board.
6. The voltage of the port is 12V DC, design Max. current is 5mA.

For ALARM terminal port CN33

1. Provide the terminal port to connect ALARM, but no voltage of the terminal port, the power from the ALARM system (not from the unit).
2. Although design voltage can support higher voltage, but we strongly ask you connect the power less than 24V, current less than 0.5A.
3. When the unit occurs the problem, the relay would be closed, then ALARM works.

LIGHT COMMERCIAL TECHNICAL DRAWINGS

Outdoor units

9K、12K

18K

24K

30K、36K、42K

48K、55K

Outdoor units — Recommended wire size

Duct

Capacity (Btu/h)		9k-18k	24k	30k	36k	36k	42k	48k	48k-55k
Outdoor Unit Power	Phase	1-phase	1-phase	1-phase	1-phase	3-phase	1-phase	1-phase	3-phase
	Frequency and Voltage	220-240V, 50Hz	220-240V, 50Hz	220-240V, 50Hz	220-240V, 50Hz	380-415V, 50Hz	220-240V, 50Hz	220-240V, 50Hz	380-415V, 50Hz
	Power Wiring (mm2)	3×1.5	3×2.5	3×2.5	3×4.0	5×2.5	3×4.0	3×6.0	5×2.5
	Circuit Breaker/ Fuse (A)	25/20	25/20	40/30	40/30	25/20	50/40	50/40	32/25
Indoor/ Outdoor Connecting Wiring	Strong Electric Signal(mm2)	4×1.0	4×1.0	4×1.0	4×1.0	4×1.0	4×1.0	4×1.0	4×1.0

Round Flow Cassette

Capacity (Btu/h)		24k	30k	36k	36k	42k	48k	48k-55k
Outdoor Unit Power	Phase	1-phase	1-phase	1-phase	3-phase	1-phase	1-phase	3-phase
	Frequency and Voltage	220-240V, 50Hz	220-240V, 50Hz	220-240V, 50Hz	380-415V, 50Hz	220-240V, 50Hz	220-240V, 50Hz	380-415V, 50Hz
	Power Wiring (mm2)	3×2.5	3×2.5	3×4.0	5×2.5	3×4.0	3×6.0	5×2.5
	Circuit Breaker/ Fuse (A)	25/20	40/30	40/30	25/20	50/40	50/40	32/25
Indoor/ Outdoor Connecting Wiring	Strong Electric Signal(mm2)	4×1.0	4×1.0	4×1.0	4×1.0	4×1.0	4×1.0	4×1.0

Round Flow Compact Cassette

Capacity (Btu/h)		9k-18k
Outdoor Unit Power	Phase	1-phase
	Frequency and Voltage	220-240V, 50Hz
	Power Wiring (mm2)	3×1.5
	Circuit Breaker/ Fuse (A)	25/20
Indoor/ Outdoor Connecting Wiring	Strong Electric Signal(mm2)	4×1.5

Ceiling & Floor

Capacity (Btu/h)		18k	24k	30k	36k	36k	42k	48k	48k-55k
Outdoor Unit Power	Phase	1-phase	1-phase	1-phase	1-phase	3-phase	1-phase	1-phase	3-phase
	Frequency and Voltage	220-240V, 50Hz	220-240V, 50Hz	220-240V, 50Hz	220-240V, 50Hz	380-415V, 50Hz	220-240V, 50Hz	220-240V, 50Hz	380-415V, 50Hz
	Power Wiring (mm2)	3×1.5	3×2.5	3×2.5	3×4.0	5×2.5	3×4.0	3×6.0	5×2.5
	Circuit Breaker/ Fuse (A)	25/20	25/20	40/30	40/30	25/20	50/40	50/40	32/25
Indoor/ Outdoor Connecting Wiring	Strong Electric Signal(mm2)	4×1.0	4×1.0	4×1.0	4×1.0	4×1.0	4×1.0	4×1.0	4×1.0

Console

		Console		Console High Efficiency
Capacity (Btu/h)		9/12k	18k	9/12k
Outdoor Unit Power	Phase	1-phase	1-phase	1-phase
	Frequency and Voltage	220-240V, 50Hz	220-240V, 50Hz	220-240V, 50Hz
	Power Wiring (mm2)	3×1.5	3×2.5	3×1.5
	Circuit Breaker/ Fuse (A)	20/16	20/16	25/20
Indoor/ Outdoor Connecting Wiring	Strong Electric Signal(mm2)	4×1.0	4×1.0	4×1.0

Floor Standing

		M		FN	
Capacity (Btu/h)		48k	48k/55k	48k	48k/55k
Outdoor Unit Power	Phase	1-phase	3-phase	1-phase	3-phase
	Frequency and Voltage	220-240V, 50Hz	380-415V, 50Hz	220-240V, 50Hz	380-415V, 50Hz
	Power Wiring (mm2)	3×6.0	5×2.5	3×6.0	5×2.5
	Circuit Breaker/ Fuse (A)	50/40	32/25	50/40	32/25
Indoor/ Outdoor Connecting Wiring	Strong Electric Signal(mm2)	4×1.5	4×1.5	4×1.5	4×1.5

Outdoor units — Recommended wire size

Duct / Cassette / Ceiling & Floor/ Console / M Floor Standing

9K、12K /Console High Efficiency 9K

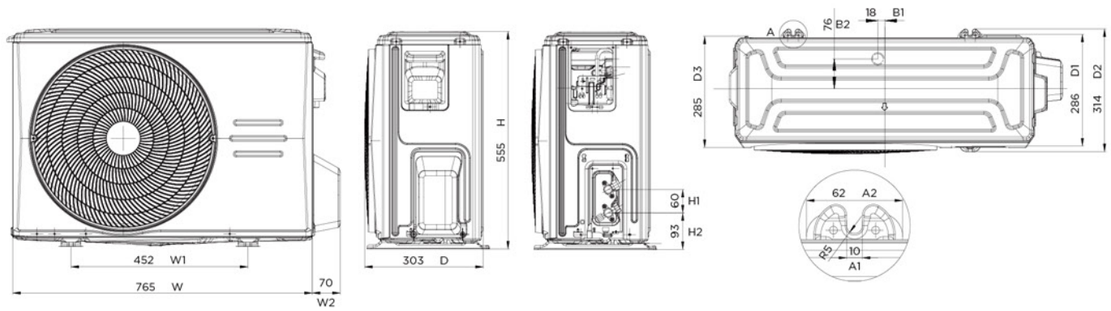

30K、36K、42K

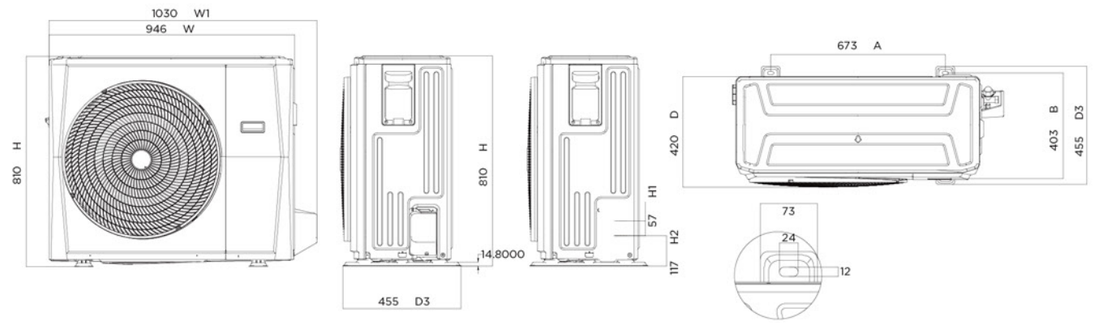

18K

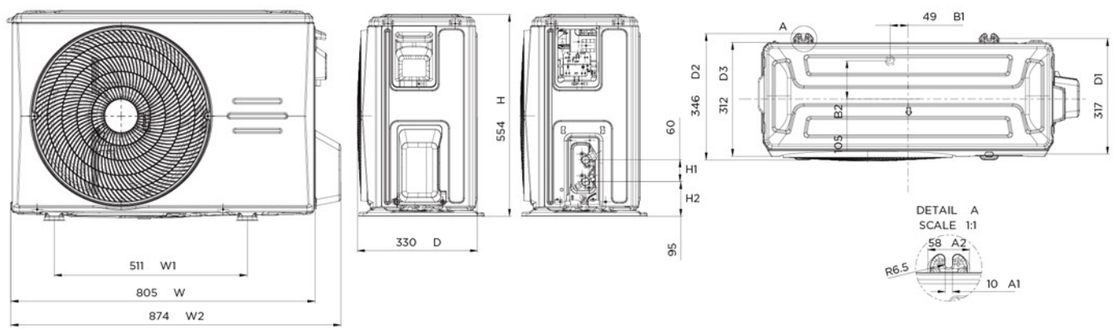

48K、55K

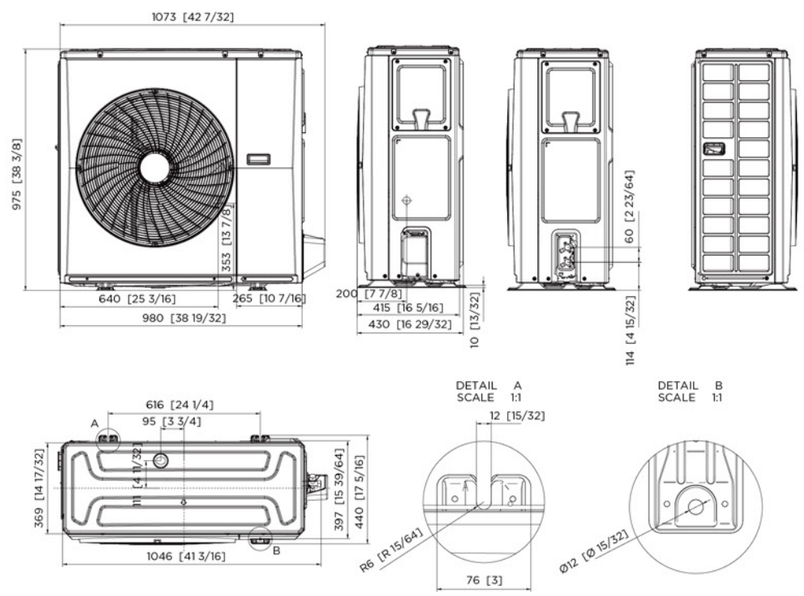

24K / Console High Efficiency 12K

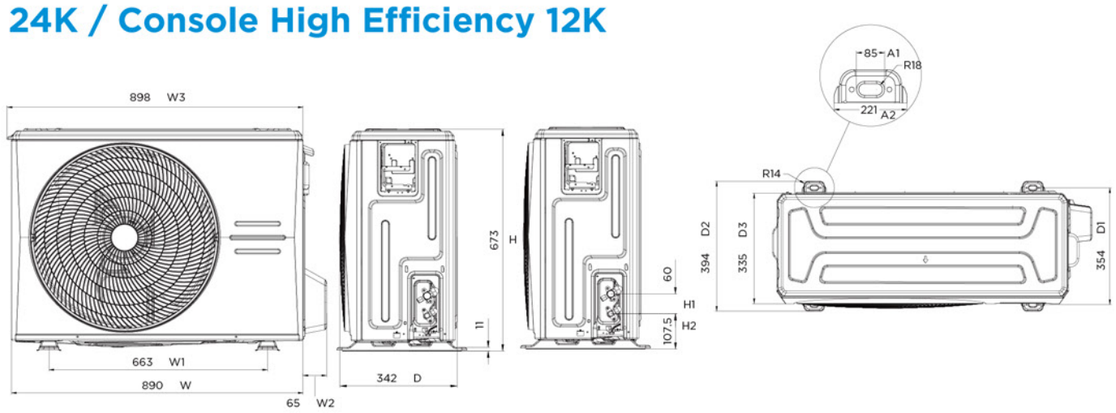

Service Place

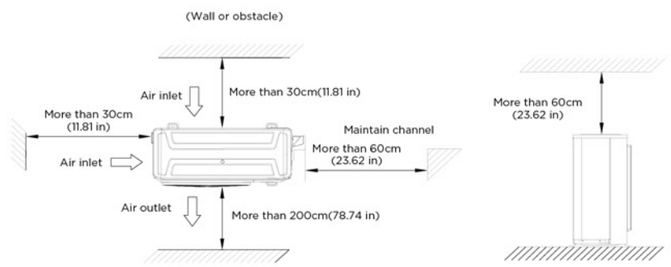

Outdoor units — Recommended wire size

Anchor Outdoor Unit

Note:

- The outdoor unit can be anchored to the ground or to the wall-mounted bracket with bolt(M10).
- The following is a list of different outdoor unit sizes and the distance between their mounting feet.
- Prepare the installation base of the unit according to the dimensions below.

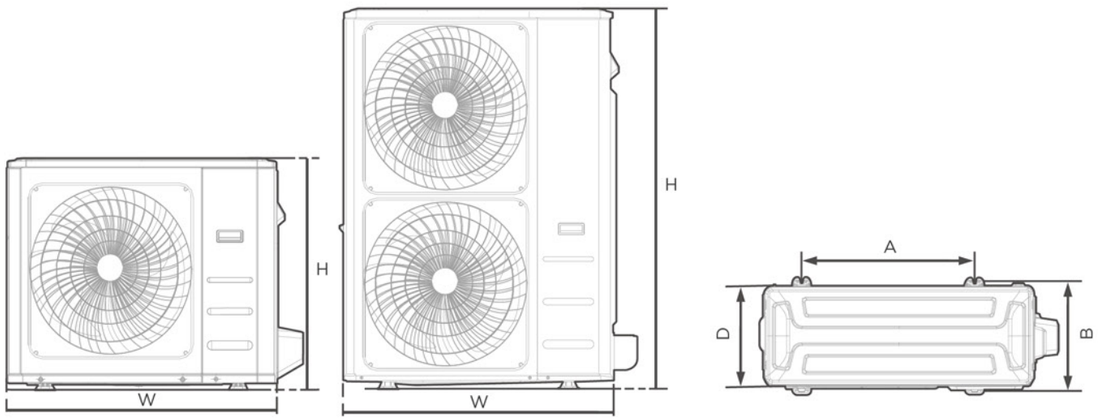

Outdoor Unit Dimensions(W×H×D)	Mounting Dimensions(unit:mm)	
	Distance A	Distance B
765×555×303	452	286
784×555×303	452	286
805×554×330	511	317
890×673×342	663	348
946×810×403	673	403
952×1333×415	634	404
980×975×415	615	440

Rows of series installation

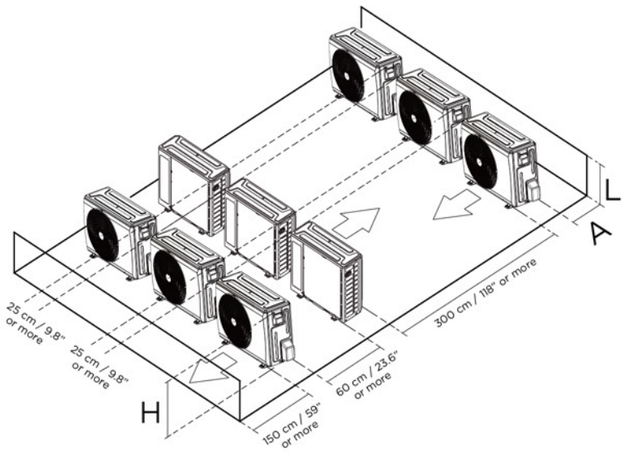

The relations between H, A and L are as follows.

	L	A
L < H	L ≤ 1/2H	≥25 cm
	1/2H < L ≤ H	≥30 cm
L > H	Can not be installed	

Outdoor units — Refrigerant piping connection

Notes on pipe length and drop height .(Unit : m/ft.)

Model	Pipe Size(Diameter:ø)mm		Piping length(m)		Maximum drop height (m)	Additional Refrigerant
	Gas	Liquid	Rated	Max		
MOX230-09HFN8-QRD0W(GA)	9.52	6.35	5	25	10	12g/m
MOX230-09HFN8-QRD1W(GA)						
MOX230-09HFN8-QRD6W(GA)						
MOX230-12HFN8-QRD0W(GA)						
MOX430-12HFN8-QRD6W(GA)						
MOX330U-18HFN8-QRD0W(GA)	12.7			30	20	
MOX430U-24HFN8-QRD1W(GA)	15.9	9.52		50	25	24g/m
MOD30U-30HFN8-QRD1W(GA)						
MOD30U-36HFN8-QRD0W(GA)				75	30	
MOD30U-36HFN8-RRD0W(GA)						
MOD30U-42HFN8-QRD0W(GA)						
MOX630U-48HFN8-QRD0W(GA)						
MOX630U-48HFN8-RRD0W(GA)						
MOX630U-55HFN8-RRD0W(GA)						
MOE30U-48HFN8-RRD0W(GA)				65		
MOE30U-48HFN8-QRD0W(GA)						

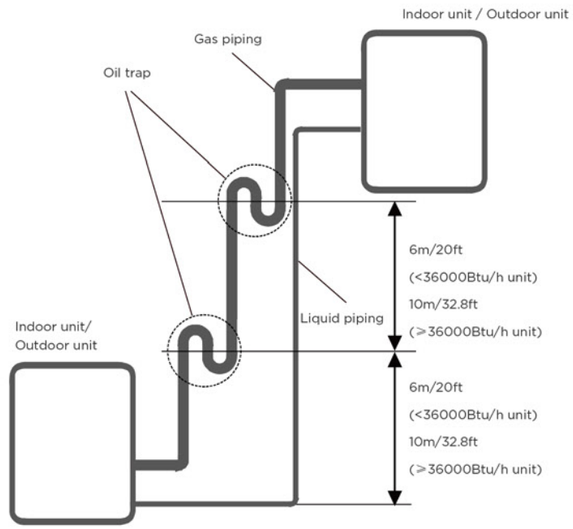

⚠ CAUTION

Oil traps

If oil flows back into the outdoor unit's compressor, this might cause liquid compression or deterioration of oil return. Oil traps in the rising gas piping can prevent this.

An oil trap should be installed every 6m(20ft) of vertical suction line riser (<36000Btu/h unit). An oil trap should be installed every 10m(32.8ft) of vertical suction line riser (≥36000Btu/h unit).

Recommended copper pipe thickness

Pipe Diameter	Thickness(mm)
1/4"(6.35)	0.6
3/8"(9.52)	0.7
1/2"(12.7)	0.75
5/8"(15.9)	0.75
3/4"(19)	0.8
7/8"(22)	1

Outdoor units— Y-shaped branching pipe

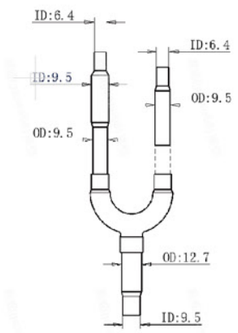

FQZHN-01C.Y

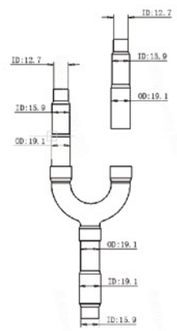

FQZHN-01C.Q

Outdoor units — Refrigerant Piping with Twins/Triple/Double Twins Indoor Units

When installing multiple indoor units with a single outdoor unit, ensure that the length of the refrigerant pipe and the drop height between the indoor and outdoor units meet the requirements illustrated in the following diagram:

Twins:

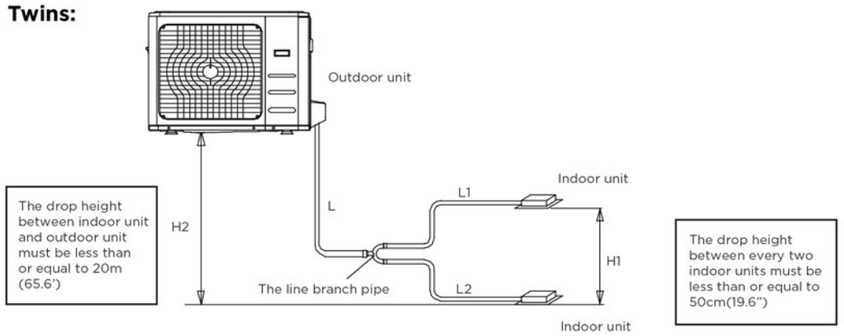

Triple:

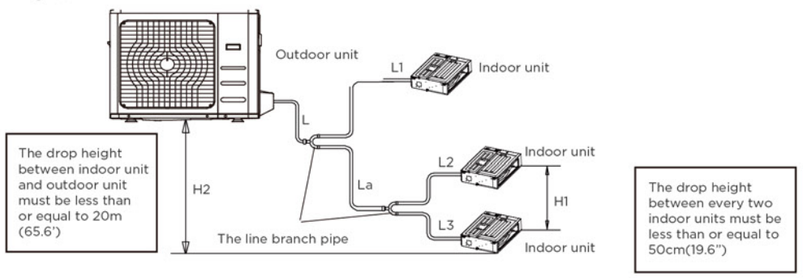

Double-Twins:

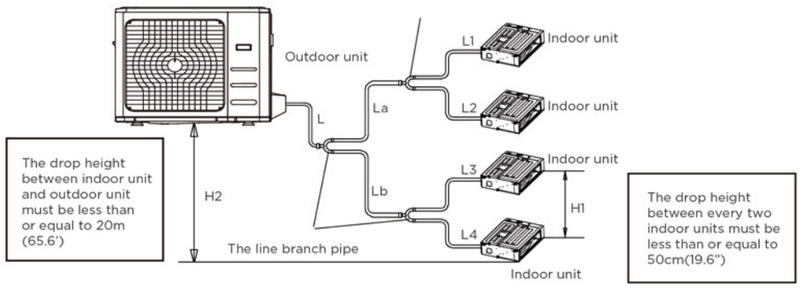

Permitted length(Unit:m.)				
Piping length	Total piping length	12k+12k	25	L+Max (L1,L2)
		18k+18k	30	
		24k+24k 30K+30K	50	
	(farthest distance from the line pipe branch)	15		L1, L2
	(farthest distance between L1 and L2)	10		L1-L2
Drop height	Drop height between indoor and outdoor unit	20		H2
	Drop height between two indoor units	0.5		H1

Outdoor units — Refrigerant Piping with Twins/Triple/Double Twins Indoor Units

A7 Duct & New compact Cassette type(A4):

Permitted length(Unit:m)					
Piping length	Twins	Total piping length	9k+9k	50	L+L1+L2
			12k+12k	50	
			18k+18k	75	
			24k+24k 30k+30k		
		Farthest distance from line pipe branch	15		L1,L2
		farthest distance from the line pipe branch	10		L1-L2
	Triple	Total piping length	9k+9k+9k	75	L+L1+L2+L3+La
			12k+12k+12k		
			18k+18k+18k		
		Farthest distance from line pipe branch	15		L1,L2+La,L3+La
		farthest distance from the line pipe branch	10		L1-(L2+La),L1-(L3+La),L2-L3
	Double Twins	Total piping length	9k+9k+9k+9k	75	L+L1+L2+L3+L4+La+Lb
			12k+12k+12k+12k		
		Farthest distance from line pipe branch	15		L1,L2,L3,L4
		farthest distance from the line pipe branch	10		L1-L2,L1-L3,L1-L4, L2-L3,L2-L4,L3-L4
Drop height	Drop height between indoor and outdoor unit		20		H2
	Drop height between two indoor units		0.5		H1

Branching pipe:

IDU	IDU	IDU Pipe Diameter (liquid&gas)	ODU	ODU Pipe Diameter (liquid&gas)
A7 Duct	9k+9k	6.35&9.52	24k	9.52&15.9
New compact Cassette			18k	6.35&12.7
Duct	12k+12k	6.35&9.52	24k	9.52&15.9
New compact Cassette				
Duct	18k+18k	6.35&12.7	36k	9.52&15.9
New compact Cassette				
Ceiling & Floor				
Duct	24k+24k	9.52&15.9	48k	9.52&15.9
Cassette				
Ceiling & Floor				
Duct	30k+30k	9.52&15.9	55k	9.52&15.9
Cassette				
A7 Duct	9k+9k+9k	6.35&9.52	36k	9.52&15.9
New compact Cassette			24k	
Duct	12k+12k+12k	6.35&9.52	36k	9.52&15.9
New compact Cassette				
Duct	18k+18k+18k	6.35&12.7	55k	9.52&15.9
New compact Cassette				
A7 Duct	9k+9k +9k+9k	6.35&9.52	48k	9.52&15.9
New compact Cassette				
Duct	12k+12k +12k+12k	6.35&9.52	36k	9.52&15.9
New compact Cassette			48k	

Additional Refrigerant Charge :

- After the vacuum drying process is carried out, the additional refrigerant charge process need to be performed.
- The outdoor unit is factory charged with refrigerant. The additional refrigerant charge volume is decided by the diameter and length of the liquid pipe between indoor and outdoor unit. Refer the following formula to calculate the charge volume .

	Diameter of liquid pipe(mm)	Formula
R32	6.35(1/4)	V=12(0.13)g/m(oz/ft)×(L-standard pipe length)
	9.52(3/8)	V=24(0.26)g/m(oz/ft)×(L-standard pipe length)
	12.7(1/2)	V=40(0.42)g/m(oz/ft)×(L-standard pipe length)

V : Additional refrigerant charge volume.
L : The length of the liquid pipe.

Note:

1. It is suggested to add refrigerant quantity (g) according to the formula in the table.

   If the calculation result is less than 0, there is no need to adjust it;

2. According to the system pressure adjustment additional refrigerant.

ODU	IDU	Formula
Twins		
18k	New compact Cassette-9k	(L1+L2+L-5)*12
24k	A7 Duct-9k/12k	(L1+L2)*12+(L-5)*24-120
24k	New compact Cassette-12k	(L1+L2)*12+(L-5)*24+700
36k	New compact Cassette-18k	(L1+L2)*12+(L-5)*24
36k	A7 Duct-18k	(L1+L2)*12+(L-5)*24-240
36k	Ceiling & Floor-18k	(L1+L2)*12+(L-5)*24+390
48k	A7 Duct-24k	(L1+L2+L-5)*24-240
48k	Ceiling & Floor-24k	(L1+L2+L-5)*24+390
48k	Cassette-24k	(L1+L2+L-5)*24
60k	Cassette-30k	(L1+L2+L-5)*24+250
Triple		
24k	New compact Cassette-9k	(L1+L2+L3)*12+(L+La-5)*24+540
36k	A7 Duct-9k/12k	(L1+L2+L3)*12+(L+La-5)*24-180
60k	A7 Duct-18k	(L1+L2+L3)*12+(L+La-5)*24-180
36k	New compact Cassette-12k	(L1+L2+L3)*12+(L+La-5)*24+570
60k	New compact Cassette-18k	(L1+L2+L3)*12+(L+La-5)*24+500
Double Twins		
36k	New compact Cassette-9k	(L1+L2+L3+L4)*12+(L+La+Lb-5)*24
48k	A7 Duct-9k/12k	(L1+L2+L3+L4)*12+(L+La+Lb-5)*24-240
48k	New compact Cassette-12k	(L1+L2+L3+L4)*12+(L+La+Lb-5)*24+660

HEAT PUMP WATER HEATER TECHNICAL DRAWINGS

CATALOGUE

Floor-standing Combo HPWH

Wall-mounted Combo HPWH

CATALOGUE

Wall-mounted Combo HPWH

RSJ-08/80RDN7-B1 Dimensional Drawings

Unit:mm

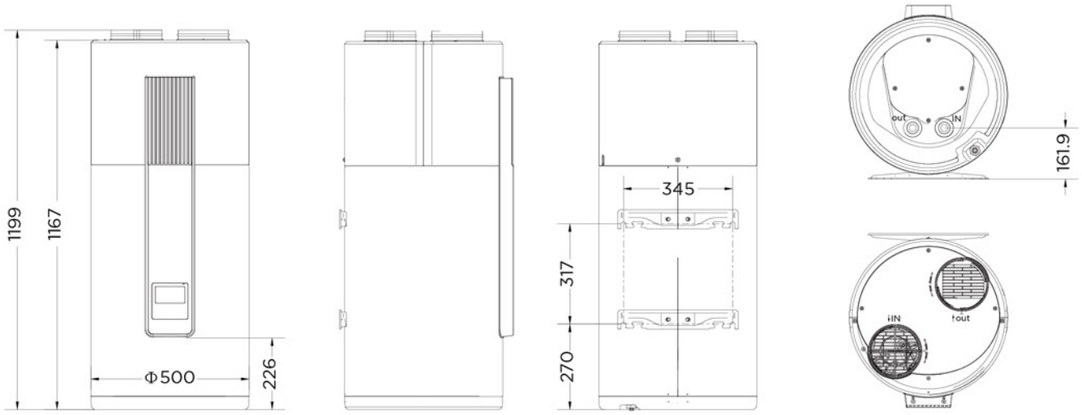

RSJ-09/100RDN7-B1 Dimensional Drawings

Unit:mm

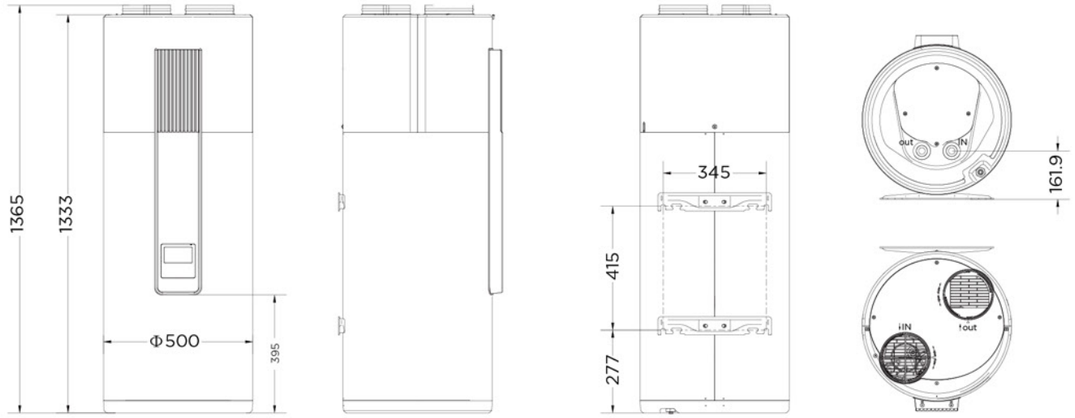

RSJ-09/150RDN7-B1 Dimensional Drawings

Unit:mm

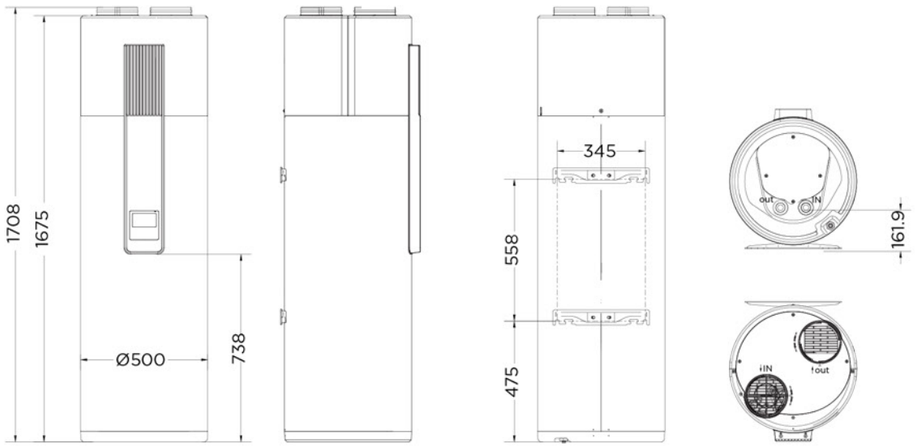

Service Place

Unit:mm

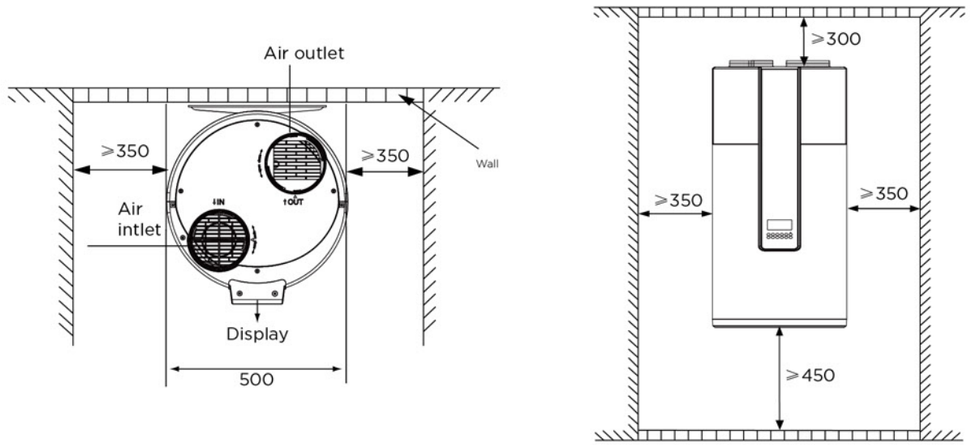

Wall-mounted Combo HPWH

Service Place

Mounting dimension

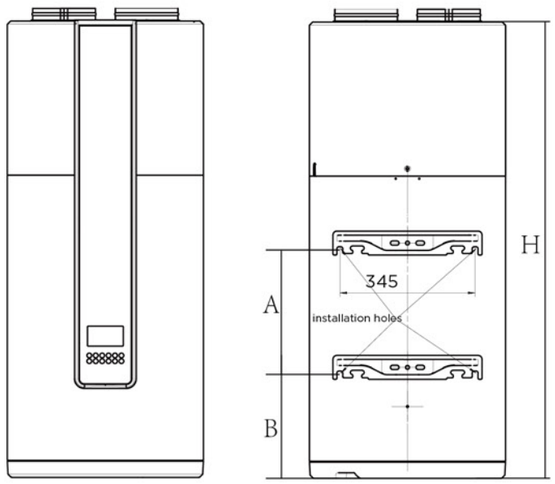

Table. 5-1

Model	A	B	H
EU-RSJ-08/ 80RDN7-B1	317	270	1167
EU-RSJ-09/ 100RDN7-B1	415	277	1333
EU-RSJ-09/ 150RDN7-B1	558	475	1675

Note:

- Place it as close as possible to important points of use.
- Make sure that the wall or support element is sufficient to withstand the weight of the water heater full of water.
- It is mandatory to install a retention basin below the water heater if installed above a living area. A drain connected to the sewer is required.

Mark the wall with reference to the requirements of the installation size (size drawing). Proceed to drill the holes, install the dowels suitable for the type of wall and screw in the fixing screws.

The wall must hold a minimum load of 300 kg.

If the wall cannot bear the load of the product, please use a floor stand (optional)

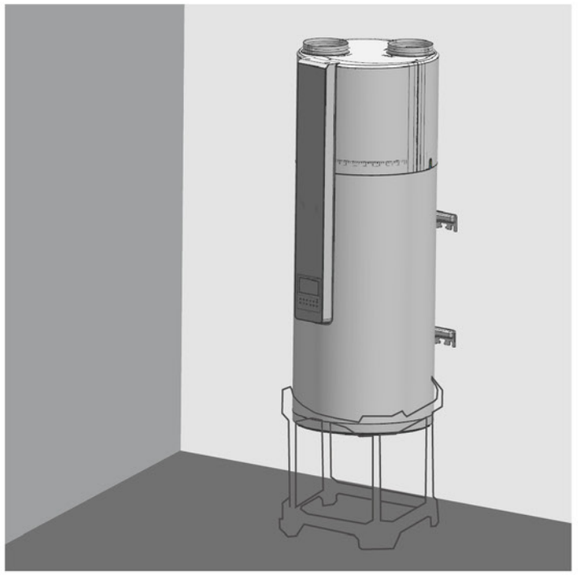

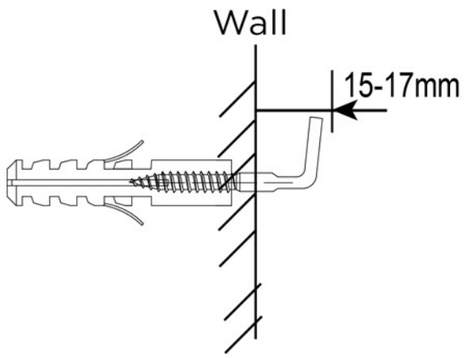

It is mandatory to install the water heater on a support. Place the water heater on the bracket to mark the fixing points. Make the holes and then reinstall the water heater in its place. The anti-tilting fixing by the upper bracket is obligatory (fixing Ø 10mm minimum adapted to the wall).

The hole size for hanging the wall should correspond hole size in Figure 5-6 (two racks for each water tank, a total of four expansion bolts needs to be fixed).

Floor-standing Combo HPWH

RSJ-15/181RDB10N7-L1 Dimensional Drawings

Unit:mm

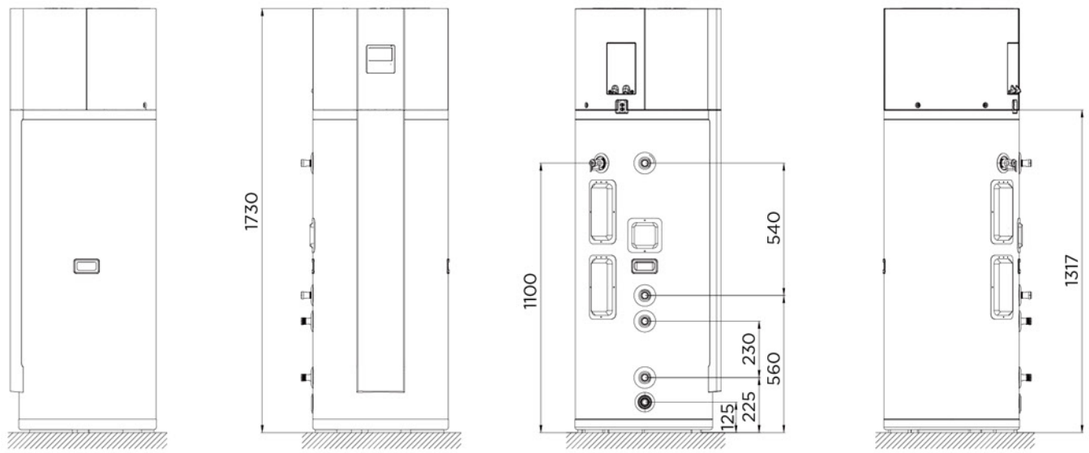

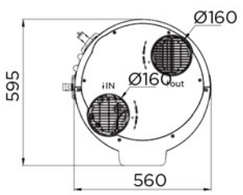

RSJ-15/270RDB10N7-L1 Dimensional Drawings

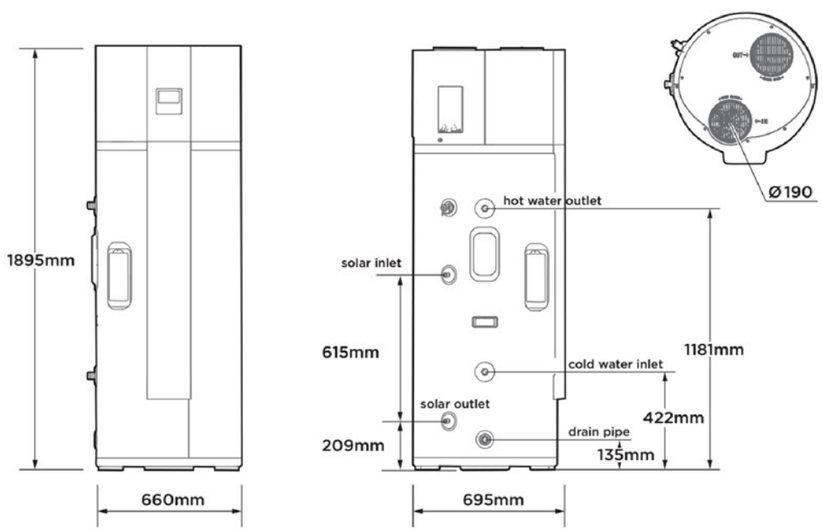

RSJ-15/185RDN7-L1 Dimensional Drawings

Unit:mm

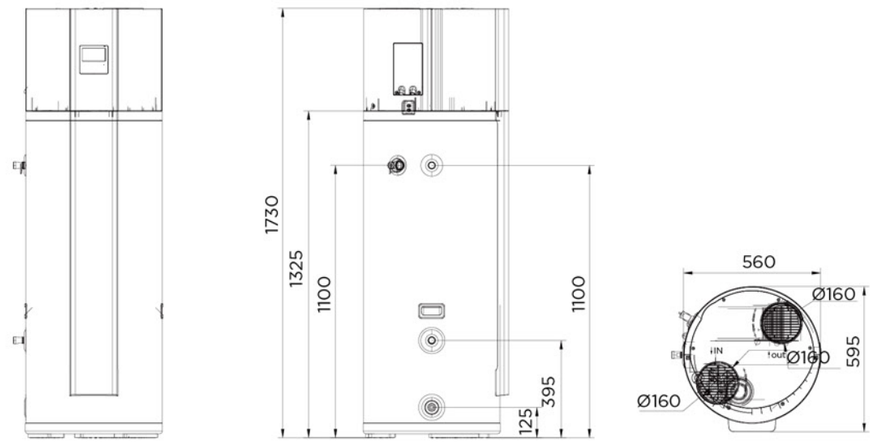

RSJ-15/275RDN7-L1 Dimensional Drawings

Unit:mm

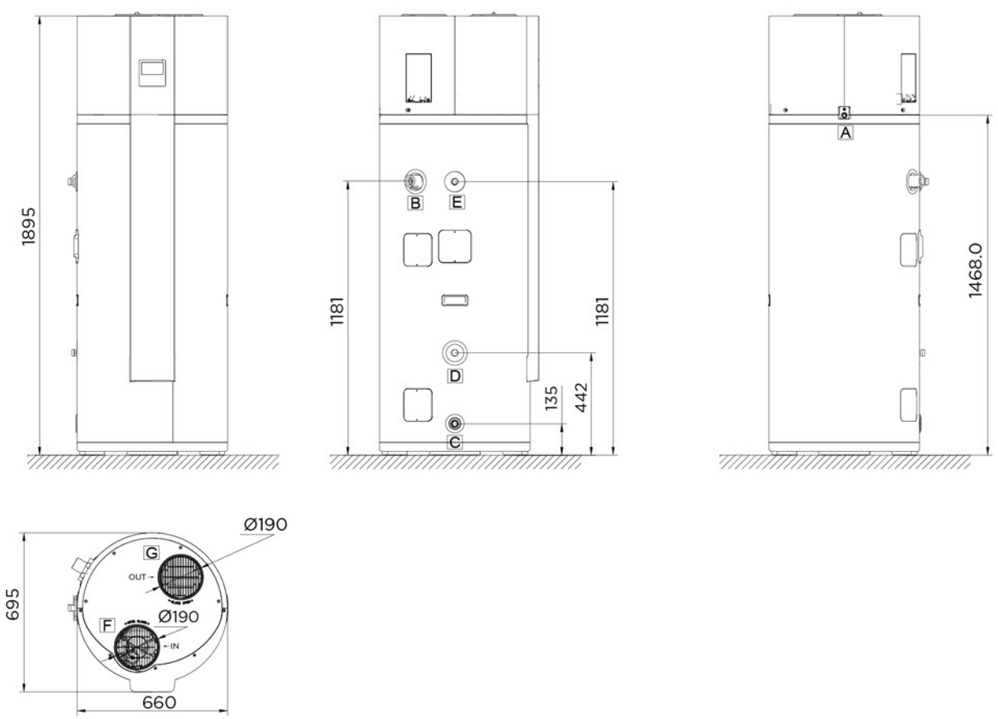

Floor-standing Combo HPWH

Service Place

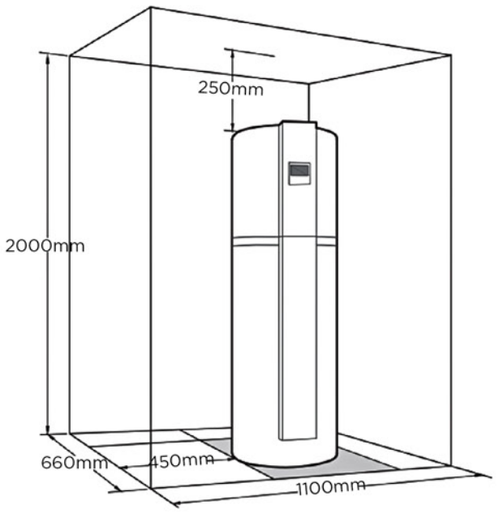

RSJ-15/181RDB10N7-L1

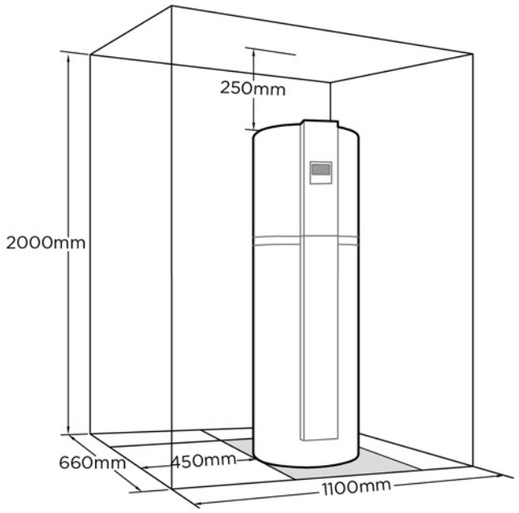

RSJ-15/185RDB10N7-L1

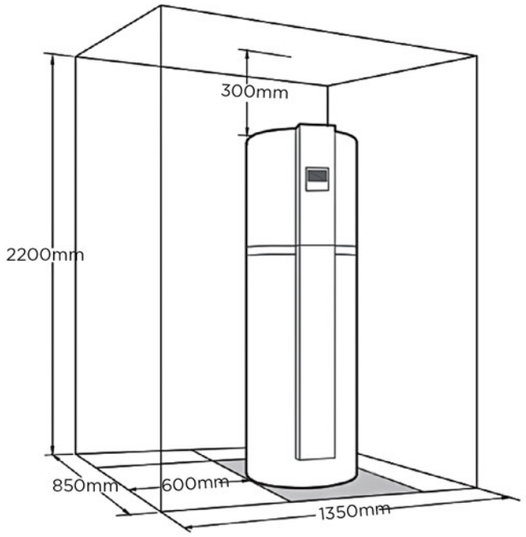

RSJ-15/270RDB10N7-L1

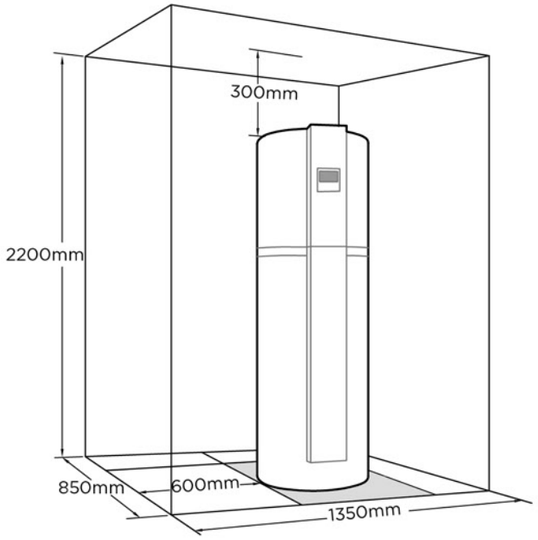

RSJ-15/275RDB10N7-L1

Location requirements

IMPORTANT! The unit must be installed indoor, it is not allowed to be installed outdoor without shelter. Avoid installation in direct sunlight.

WARNING:

- In case of rain entering to internal components of the unit, the component might be damaged or causing physical danger.
- In terms of the unit connect with duct reaching to outdoor, a reliable water resistant measure must be conduct on the duct, to prevent water from dropping into internal of the unit.
- The unit needs to be securely fixed, otherwise it may cause heavy consequences.

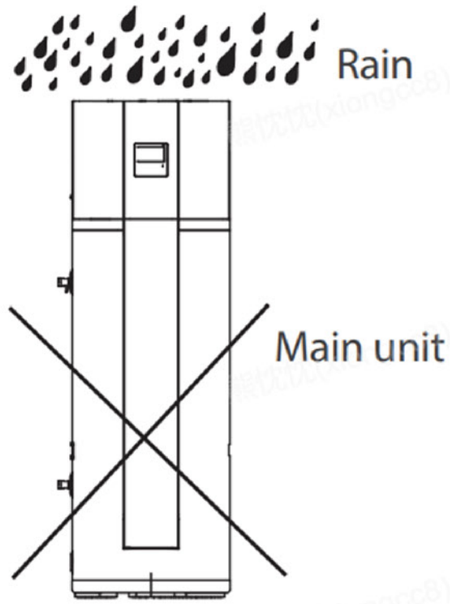

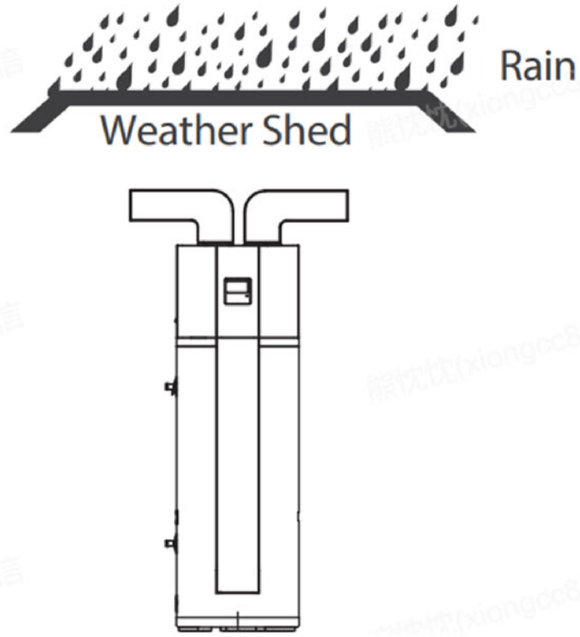

CAUTION:

- If the unit is installed on the balcony, the water full weight should not exceed the load-bearing limit of the balcony.
- If the unit has to be installed on a metal part of building, make sure the well electric insulation which should meet the relevant local electric standard.
- The unit installed in indoor space might cause indoor temperature decrease and noise. Please take preventive measures for this.
- The unit should be located in an area not subject to freezing temperatures. The unit located in unconditioned spaces (i.e., garages, basements, etc.) may require the water piping, condensate piping, and drain piping to be insulated to shelter against freezing.

Floor-standing Combo HPWH

Fixing method

CAUTION: In order to prevent accidental fall, please fasten the water heater to the walls.

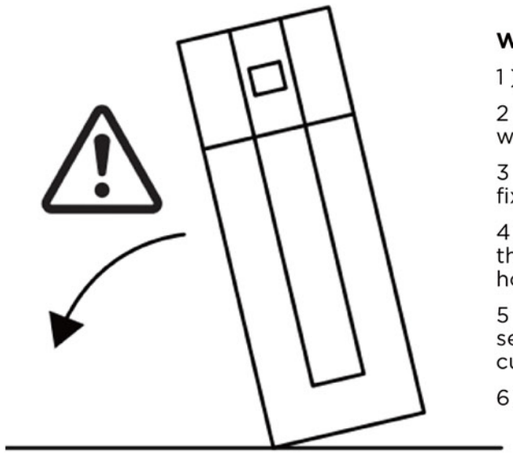

Water heater fixing steps are as follows:

1) Take off the front decorative board.

2) Install the expansion bolts (not provided) in the wall according to the drawing.

3) Fix the end with less holes for mounting the fixing strip on the expansion bolt.

4) Tighten the fixing strip and fix the other end to the second expansion bolt through appropriate hole.

5) Check whether the water tank is safely and securely fixed. If there's extra fixing strip, please cut off.

6) Put back the decorative board.

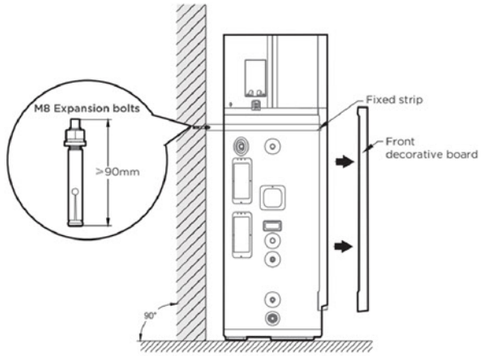

CAUTION:

- The appearance and installation orientation of the unit shown above are for reference only and can be adjusted
- according to the actual installation.
- The position of the fixed strip can be adjusted according to the actual situation, make sure the unit is safely and securely fixed.
- The expansion bolt requirement must match the weight of the product (loaded with water).

GAS BOILER
TECHNICAL DRAWINGS

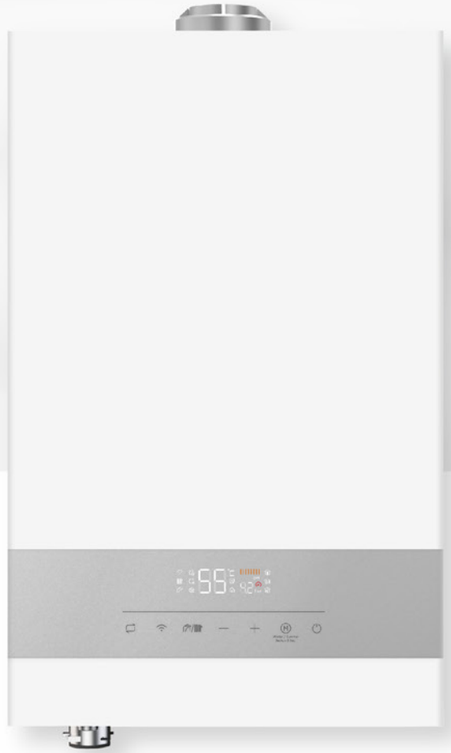

CATALOGUE

Gas Boiler Electric Boiler

CATALOGUE

Gas Boiler Electric Boiler

Dimensional Drawings

Unit:mm

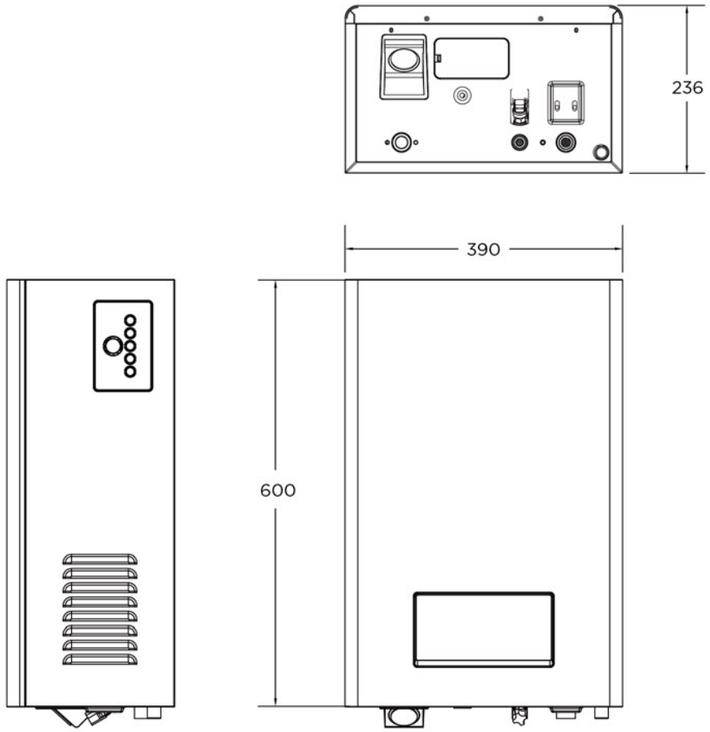

Service Place

Unit:mm

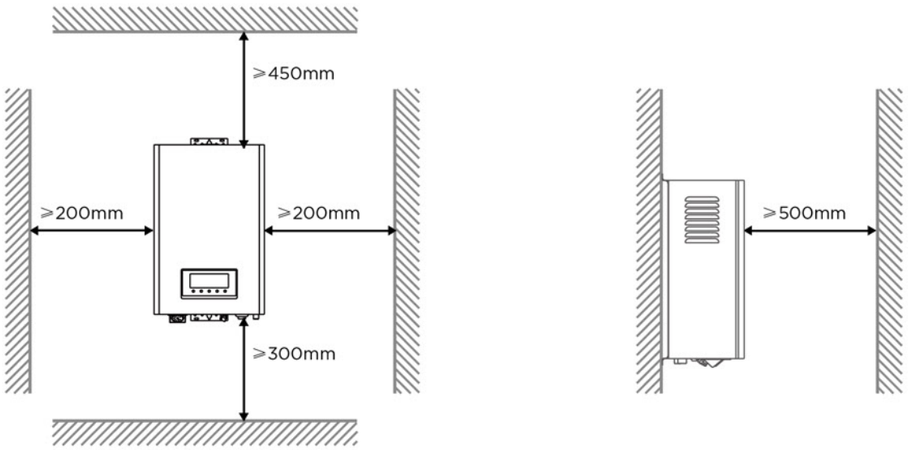

Installation

1) Hang the wall-hanging furnace vertically.

Drill holes, insert expansion bolts in the upper holes, and plastic plugs in the lower holes, then screw on tapping screws. Confirm the position of concealed wires and pipes with the user before drilling. For hollow brick walls, take reinforcement measures before installation.

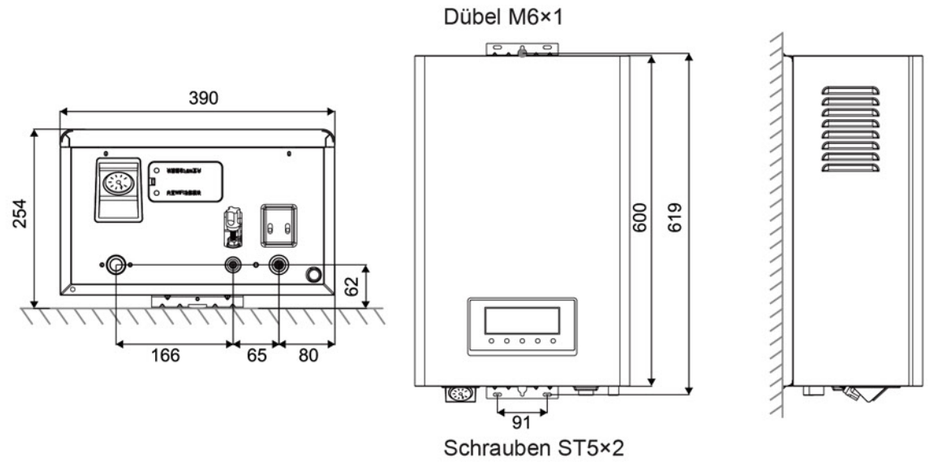

2) Hanging of complete machine

Install a filter on the return water pipe with a valve in front for cleaning. Heating pipe diameter must be ⩾ DN20, water supply pipe diameter must be ⩾ DN15. All water pipes connected to the wall-hanging furnace must have valves matching the pipe sizes.

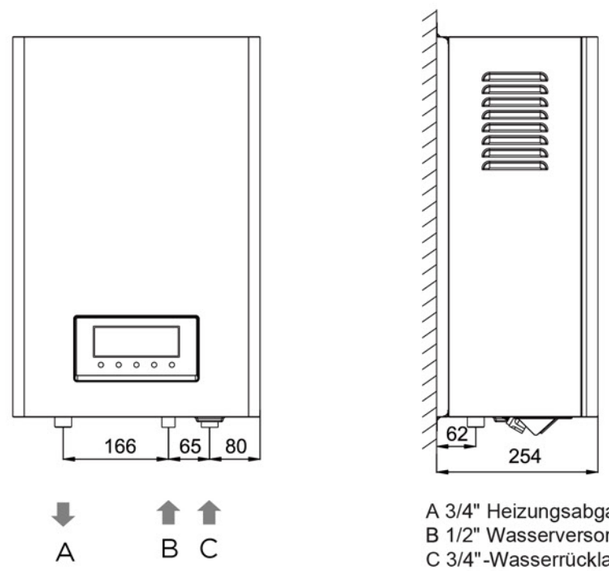

A 3/4" Heizungsabgasrohr
B 1/2" Wasserversorgungsleitung
C 3/4"-Wasserrücklaufleitung für die Heizung

Points to Remember when Installing Outdoor Units

Wind and snow can significantly reduce capacity. Be sure to check the information below and install the outdoor unit correctly.

Measure for Drainage Water

Case 1: Unit Is Installed Close To Passage (Walkway)

Do not install the unit close to passage as drainage water from the unit may freeze and cause a slipping hazard.

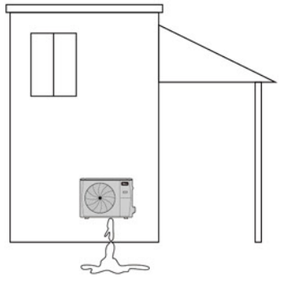

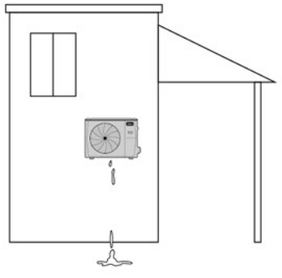

Wrong Installation

- Frozen drainage water may cause a slipping hazard

Correct Installation

- Install at a sufficient height from the ground to prevent problems caused by frozen drainage water.
- Install in a location where frozen drainage water will not be a hazard.
- Install in an upright position to allow proper drainage from the drainage outlet.

Case 2: Multiple Units Are Installed

Do not install units on top of one another as it may cause frozen drainage water on the bottom unit.

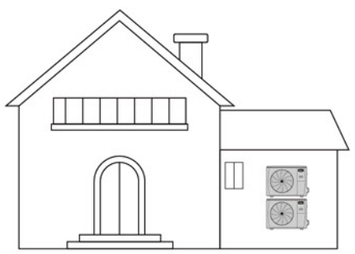

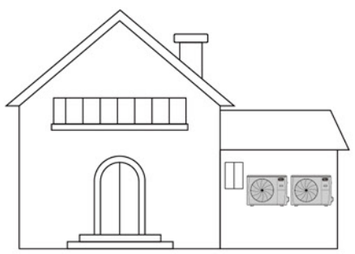

Wrong Installation

- Wrong Installation Bottom unit may freeze over

Correct Installation

- Place units side by side

Installation Location

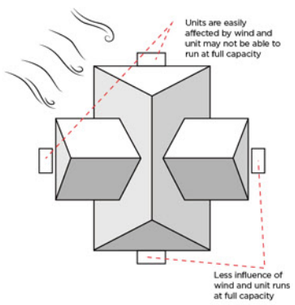

Be aware of the prevailing wind direction in winter and install the outdoor unit where it is as sheltered as possible.

Measure For Snow

Do Not Install The Unit On The Ground

To avoid the adverse effects of snow and frozen drainage water , install the unit on a stand to ensure a sufficient height from the ground.

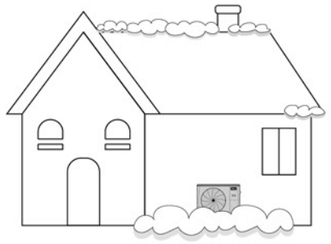

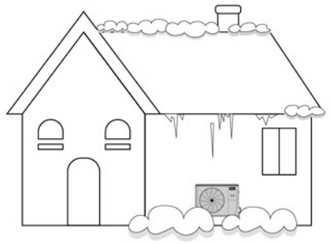

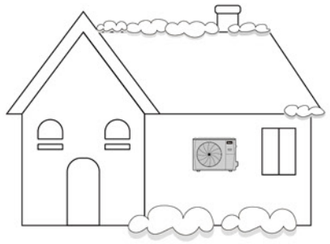

Wrong Installation

Unit may become buried in snow due to heavy snowfall, snow sliding off the roof or snowdrift.

Wrong Installation

Unit may be damaged due to snowfall or icicles.

Correct Installation

Install at a position/height to prevent the unit being buried in snow*1 and the adverse effects of frozen drainage water.

*2 Install so as to avoid the effects of snow or snowdrift. Install so as avoid the damage from falling snow or icicles.

*1 Install at a height above the highest snowfall depth.

*2 Even for correct installations , dripping drainage water. May form an icicle which needs to be cleared away regularly to Prevent a blocked drainage outlet.